Flexibility and Controllability in the Synthesis of Mass/Heat Integrated Process Systems

by

Katerina Papalexandri

A thesis submitted for the degree of Doctor of Philosophy of the University of London and for Diploma of Membership of the Imperial College

Department of Chemical Engineering and Chemical Technology
Imperial College of Science, Technology and Medicine
London SW7 2BY, U.K.

BIBL.
LONDIN.
UNIV.

To my father

Abstract

This thesis considers the incorporation of operability aspects in the synthesis (and retrofit design) of mass and heat intergated processes. A unified block-hyperstructure representation framework is proposed for systems that involve mass and heat integration for efficient use of energy, waste treatment or synthesis/production objectives in general.

Flexibility requirements over a specified range of uncertainty are introduced at the synthesis and retrofit design level of heat and mass integrated systems, through an iterative procedure, which comprises a flexibility analysis step and a multiperiod synthesis/design optimization step. Critical operating conditions within the specified uncertainty range, that limit the flexibility of the system, are identified in the flexibility analysis problem, which is formulated as mixed integer nonlinear programming (MINLP) problem. All structural and operational alternatives are considered and evaluated simultaneously through a multiperiod hyperstructure representation of the heat and/or mass integrated scheme, based on nominal and critical operating conditions. The synthesis procedure (or retrofit design) is driven by the optimization of an economic objective function (usually total annualized cost). The resulting integrated system is both flexible and economically optimal.

Controllability aspects are addressed at the synthesis/retrofit design of heat exchanger networks (HEN). Structural disturbance rejection criteria are explicitly included within an MINLP synthesis model, where the network structural variables are determined so as the final, cost-optimal network features enough manipulated variables to handle disturbances. Graph theory concepts are coupled with a generalized HEN dynamic model to incorporate dynamic aspects in the synthesis model and to ensure that in the final network a favourable control scheme can be implemented.

The block hyperstructure representation, based on fundamental mass/heat transfer principles, is generalized to describe process synthesis alternatives in general, such as absorption, distillation, reaction, etc. Exploiting the basic physico-chemical phenomena, process systems, conventional and/or not, are built as combinations of mass/heat exchange blocks. Thus, a basis is formed for operability objectives to be introduced in process synthesis in a unified manner, while synthesis schemes are optimized without being confined to conventional systems.

Acknowledgments

I would like to take this opportunity to offer my thanks to all those, who have assisted, encouraged and supported my efforts, which have culminated in this thesis.

I trully thank my supervisor, Stratos Pistikopoulos, for giving me the independence I needed and being there to refine my ideas and guide my efforts in the challenging world of research.

I am also grateful to Prof. C.A. Floudas, who inspired a large part of this work.

Many thanks to all the friends I made in the Centre, who made life there enjoyable and especially to Stavros, Matheos, Marianthi, Joaquin, Thomas, Kostas, Ana and Suji.

Friendship is not only fun and I wouldn't have come this far, without Theodora and Lila being there for me.

Akis turns everything into smile and colour, even academic debate and research struggle.

Finally, nothing could have *been*, without the love and understanding of my parents, Pavlos and Eleftheria, who put up patiently and lovingly with all my ways and moods.

Contents

List of Figures 8

List of Tables 12

Introduction 16

I Process Synthesis with Operability Considerations: Representation Issues 18

1 Process Representation: Mass/Heat Exchange Hyperstructure Module 19

1.1 Mass/Heat Exchange Network Hyperstructure 19

1.2 Process Operation within Mass/Heat Exchange Hyperstructure 22

II Operability in Heat Exchanger Networks 25

2 Flexibility Aspects in HENs Synthesis and Retrofit Design 26

2.1 Introduction 26

2.2 HEN Synthesis and Retrofit Design for Flexible Operation 30

2.3 Synthesis and retrofit design strategy 34

2.4 Multiperiod Hyperstructure Representation 38

2.5 Synthesis/Retrofit Model for Multiperiod Operation 42

2.6 Solution Procedure 46

2.7 Examples 47
Example 2.1 47
Example 2.2 49
Example 2.3 53
Example 2.4 57
2.8 Explicit Flexibility Constraints in HEN Synthesis 62
Example 2.5 68
2.9 Summary 69

3 Controllability Aspects in HENs Synthesis and Retrofit Design 71
3.1 Introduction 71
3.2 Total Disturbance Rejection in the Synthesis of HENs 75
3.3 Computational Aspects 82
3.4 Examples 83
Example 3.1 83
Example 3.2 84
Example 3.3 90
Example 3.4 90
3.5 Control Structures in the Synthesis/Retrofit of HENs 94
3.6 Hyperstructure Representation of Control Alternatives 96
3.7 Variable Time Delay Matrix 99
3.8 Variable Gain Matrix 105
3.9 HEN Synthesis and Retrofit Design with Controllability Requirements 107
3.10 Examples on Synthesis/Retrofit with Controllability Criteria 109
Example 3.5 109
Example 3.6 112
3.11 Summary and Discussion 114

III Mass/Heat Integrated Processes for Waste Minimization 117

4 Synthesis of Mass Exchange Networks **118**

4.1 Introduction 118

4.2 MEN Synthesis Problem 120

4.3 Mass Exchange Network Hyperstructure 126

4.4 Mass Exchange Network Synthesis Model 130

4.5 Examples 131

Example 4.1 131

Example 4.2 132

4.6 Mass Exchange Networks with Multiple Component Targets 135

Example 4.3 137

4.7 Reactive Mass Exchange Networks 140

Example 4.4 140

4.8 Summary 143

5 Flexibility Aspects in the Synthesis of Mass and Heat Integrated Processes **145**

5.1 Introduction 145

5.2 Synthesis of Flexible Mass/Heat Integrated Networks 146

5.3 Examples 149

Example 5.1 149

Example 5.2 151

5.4 Summary 156

IV A General Framework for Process Synthesis **159**

6 Mass/Heat Exchange Hyperstructure : A Synthesis Framework **160**

6.1 Introduction 160

6.2 Synthesis Problem 162

6.3 Multipurpose Mass/Heat Transfer Module 163

6.4 Representation of Process Units 165

6.4.a Distillation 165

6.4.b Homogeneous Reaction 166
6.4.c Two-phase Reaction 168
6.4.d Absorption/Extraction 169
6.4.e Reactive Distillation 169
6.5 Synthesis Framework 173
6.6 Examples 175
Example 6.1 175
Example 6.2 180
Example 6.3 182
Example 6.4 189
6.7 Summary and Discussion 191

7 Conclusions and Future Directions **195**
7.1 Conclusions 195
7.2 Recommendations for future directions 198

References **200**

A Flexibility Analysis of HENs **211**

B Multiperiod Synthesis/Retrofit Model **217**

C HEN Synthesis for Flexibility **236**
C.1 Synthesis Model for HEN Stage-wise Superstructure 236
C.2 MINLP-based Algorithm for Flexible and Economically Optimal HENs 238

D Disturbance Propagation and Disturbance Rejection in HENs **240**
D.1 Disturbance Propagation Analysis 240
D.2 Generic Rank of a Variable Structural Matrix 242
D.3 On the equivalence of problems (PC′) and (PC″) 247

E Pairing Model for Control Structure Selection **251**

F Time Responses and Gains in HEN Hyperstructure **255**

F.1 Dead Times and Time Responses in Network Hyperstructure 255

F.1.1 Dead Times 255

F.1.2 Time Responses 256

F.2 Fastest Response as an LP Shortest Path Problem 259

F.3 A Dynamic Model for Heat Exchanger Network Hyperstructure 265

F.3.1 The Heat Exchanger 265

F.3.2 The Splitter 267

F.3.3 The Mixer 267

F.3.4 The Pipe 268

G MEN Hyperstructure Model **270**

H Mass/Heat Exchange Hyperstructure Model for Acetone Recovery Example **279**

List of Figures

1.1 Multipurpose Mass/Heat Exchange Hyperstructure Module 21

1.2 Network Configurations - I 22

1.3 Network Configurations - II 23

2.1 Motivating heat exchanger network 30

2.2 Uncertainty region and feasible operation 32

2.3 Iterative Synthesis/Retrofit Scheme for Flexibility in HENs 37

2.4 Multiperiod hyperstructure (one-to-one exchanger assignment) 40

2.5 Hyperstructure network representation through binary variables 41

2.6 Multiperiod hyperstructure (one-to-many exchanger assignment) 41

2.7 Retrofitted HEN in Example 2.1 48

2.8 Retrofitted HEN with no reassignment cost in Example 2.1 49

2.9 Existing Network for Example 2.2 50

2.10 Retrofitted Network for Example 2.2 51

2.11 Alternative Network for Example 2.2 52

2.12 Existing Network for Example 2.3 54

2.13 Retrofitted Network for Example 2.3 55

2.14 Alternative Network for Example 2.3 56

2.15 Existing Network for Example 2.4 58

2.16 Retrofitted Network for Example 2.4 60

2.17 Alternative Network for Example 2.4 61
2.18 HEN stage-wise superstructure 64
2.19 Flexible and Economically Optimal HEN 67
2.20 Optimal Network for Example 2.5 70

3.1 Retrofitted network (flexibility considerations) 72
3.2 Iterative approach for flexibility and structural controllability 81
3.3 Retrofitted network (for flexibility and Disturbance Rejection) for Example 3.1 . . 84
3.4 Retrofitted network (for Disturbance Rejection only) for Example 3.1 85
3.5 Existing network for Example 3.2 87
3.6 Proposed network (I) for Example 3.2 88
3.7 Proposed network (II) for Example 3.2 (when reassignment is not penalized) . . . 89
3.8 Existing Network for Example 3.3 91
3.9 Retrofitted Network for Example 3.3 92
3.10 Flexible Network for Example 3.4 93
3.11 Retrofitted Network for Example 3.4 95
3.12 Minimum TAC network for working example 98
3.13 Time-delay graph/network representation 101
3.14 Potential network structure and control scheme 104
3.15 Synthesis of cost-optimal and controllable HENs 110
3.16 LP-shortest path BLOCK 111
3.17 Potential network structure and control scheme 111
3.18 Existing Network for Example 3.6 113
3.19 Retrofitted Network for Example 3.6 115

4.1 Mass Exchange Network 121
4.2 Recovery of Copper in an Etching Plant 124
4.3 MEN for copper recovery, proposed by El-Halwagi and Manousiouthakis 126
4.4 Mass/Heat Exchange Hyperstructure 127
4.5 Rich and Lean Stream Hyperstructures 128

4.6 Regenerant Hyperstructure. 129
4.7 Regenerable Lean Stream Hyperstructure. 129
4.8 Proposed MEN for copper recovery 133
4.9 Proposed MEN for phenol recovery 136
4.10 Proposed MEN for COG sweetening 138
4.11 MEN for COG sweetening, proposed by El-Halwagi and Manousiouthakis 139
4.12 Rayon production 141
4.13 Proposed reactive mass-exchange network 143

5.1 Synthesis of Flexible Mass Integrated Networks 147
5.2 Multiperiod Hyperstructure for Heat and Mass Exchange Networks 148
5.3 Proposed MEN for flexible coper recovery 151
5.4 Considered alternatives in acetone example 154
5.5 Proposed flexible acetone recovery system 157

6.1 Multipurpose Mass/Heat Exchange Hyperstructure Module 163
6.2 Distillation Column 167
6.3 Homogeneous Reactor 168
6.4 Jacketed Homogeneous Reactor 169
6.5 Two-Phase Reaction 170
6.6 Production of C from A and B - Alternative I 171
6.7 Production of C from A and B - Alternative II 172
6.8 Synthesis Framework 174
6.9 Mass/Heat and Heat Exchange Matches for Acetone Recovery 177
6.10 Acetone Recovery System 178
6.11 Acetone Recovery System - Initial Structure 179
6.12 Alkylation of Benzene 183
6.13 Conventional Columns in Benzene Alkylation 184
6.14 Reactive Distillation for Ethylene Glycol Production 186
6.15 Temperature Profile in Reactive Distillation Column 187

6.16 Composition Profile in Reactive Distillation Column 188
6.17 Heat Exchanger Network - I 190
6.18 Heat Exchanger Network - II 192

B.1 Hyperstructure network representation through binary variables 218

D.1 Retrofitted network (flexibility considerations) 243
D.2 Retrofitted network (for flexibility and Disturbance Rejection) for Example 1. . . . 243

List of Tables

2.1 Stream data for motivating example 30

2.2 Exchanger data for motivating example 31

2.3 Cost data for motivating example. 48

2.4 Stream data for Example 2.2 50

2.5 Cost data for Example 2.2 50

2.6 Stream data for Example 2.3 54

2.7 Exchanger areas for Example 2.3 55

2.8 Retrofit cost data for Example 2.3 55

2.9 Stream data for Example 2.4 59

2.10 Exchanger areas for Example 2.4 59

2.11 Retrofit cost data for Example 2.4 59

2.12 Stream data for Example 2.5 68

2.13 Heat Exchange data for Example 2.5 68

2.14 Exchanger Areas for Example 2.5 69

3.1 Variable structural matrix for network hyperstructure 78

3.2 Stream data for Example 3.2 86

3.3 Heat transfer coefficients, in KW/m^2K 86

3.4 Cost data for Example 3.2 86

3.5 Heat Exchanger Areas for Example 3.2 87

3.6 Retrofit cost data for Example 3.4 93
3.7 Control alternatives for the illustrative example 100
3.8 Fastest time response of controlled outputs in proposed structure of Figure 3.13 . . 104
3.9 Gain matrix for proposed control scheme in network of Figure 3.13 105
3.10 Areas of proposed network 109
3.11 Fastest time response of controlled outputs in proposed structure 112
3.12 Gains matrix for proposed control scheme 112
3.13 Stream data for fouling example. 113
3.14 Exchanger areas for fouling example. 114
3.15 Time responses in proposed network and control structure (2 periods). 114
3.16 Gain matrix in proposed network and control structure (2 periods). 115

4.1 Rich streams of copper recovery problem 124
4.2 Lean streams of copper recovery problem 125
4.3 Capital cost data for copper recovery problem 125
4.4 Rich streams in phenol recovery. 133
4.5 Lean streams in phenol recovery. 134
4.6 Rich streams in COG sweetening. 137
4.7 Lean streams in COG sweetening. 137
4.8 Rich streams in reactive mass-exchange network. 142
4.9 Lean streams in reactive mass-exchange network. 142
4.10 Minimum allowable composition differences. 142

5.1 Streams of copper recovery problem 150
5.2 Stream data and specifications for acetone recovery. 152
5.3 Cost data for acetone recovery. 155
5.4 Annualized costs. 155
5.5 Stream flows in Acetone Recovery. 156
5.6 Design parameters in acetone recovery. 158

6.1 Stream Data and Specifications for Acetone Recovery 176

6.2 Utility Cost Data for Acetone Recovery 177
6.3 Capital Cost Data for Acetone Recovery 177
6.4 Operating Cost Data for Benzene Alkylation 182
6.5 Capital Cost Functions for Benzene Alkylation 182
6.6 Chemical and Physical Data for Ethylene Glycol Example 185
6.7 Cost Data for Ethylene Glycol Example 187
6.8 First Example in Heat Integration 190
6.9 Second Example in Heat Integration 191
6.10 Stream Compositions for Second Example in Heat Integration 192
6.11 Physical Properties for Second Example in Heat Integration 193
6.12 Cost Data for Second Example in Heat Integration 193

A.1 Nomenclature for Problem (FAP). 216

B.1 Notation of heat flow model. 231
B.2 Binary-structural Variables for Hyperstructure Model (one-to-one assignment). . . 232
B.3 Continuous Variables and Parameters for Hyperstructure Model (one-to-one assignment). 233
B.4 Additional Variables for Retrofit Model (one-to-one assignment). 234
B.5 Variables for Hyperstructure Model (one-to-many assignment). 234
B.6 Variables for Hyperstructure Model (one-to-many assignment). 235

C.1 Continuous Variables and Parameters for HEN Stage-wise Superstructure Model . 239

D.1 Structural matrix for network of Figure B.1 244
D.2 Structural matrix for network of Figure B.2 244

E.1 Variables for Pairing Model. 254

F.1 Shortest time responses of $\mathbf{T^O}_{i'}$ to network inputs. 256
F.2 Shortest time responses of $\mathbf{T^O}_{j'}$ to network inputs. 257

G.1 Variables for MEN Hyperstructure Model. 277

G.2 Variables for MEN Hyperstructure Model (cont'd). 278

Introduction

Process synthesis, when first emerged as a separate research area, was defined as *"the act of determining the optimal interconnection of processing units as well as the optimal unit type and design of the units within a process system"* (Nishida *et al.*, 1981). Optimality has been determined mainly from the economic performance of a process system, with one of the major factors of the economic viability of a chemical plant being traditionally its energy consumption. Hence, in parallel with synthesis efforts for overall processes, the heat recovery problem formed on its own an active research field. Following the general synthesis trends, evolutionary methods were developed in parallel, independently or even in conjunction with algorithmic techniques. Heat integration possibilities have been explored after the chemical plant structure and design have been determined or simultaneously, with the synthesis of separation systems, reaction networks etc. In the last decade, increasing environmental awareness, in chemical plant design as well as in other areas, has drawn attention to another type of plant integration, towards waste minimization and minimum environmental impact. Integration of waste treatment technologies has led towards "mass" integrated processes, which comply more efficiently with environmental specifications. Heat and mass integration have evolved to being two major directives in the synthesis and design of chemical processes that perform efficiently with low operating, capital and environmental cost.

However, the uncertain environment, where a chemical plant is bound to operate, affects drastically its overall performance, even in pure economic terms. The inability of a chemical plant design to satisfy its operational specifications due to external disturbances or inherent variability and uncertainty, may lead to significant economic loss or even overall plant failure. Thus, operability considerations are introduced in the economic evaluation of a process. Interactions between

process design and process control have proven to have a great impact on the economic optimality of a process. The traditional practise for overcoming the problem of uncertain plant operation has been the sequential design method (i.e. optimization of the design based on steady-state economics, operability analysis of the economically optimal process, design of the control system and retrofit remedies to overcome operability bottlenecks that the control system cannot compensate for). This sequential consideration may lead to designs that are quite far from economic optimality. Consequently, operability requirements (such as flexibility, controllability and reliability) become a second direction in comprehending the economical optimality of a design and have to be taken simultaneously into account during process optimization.

An attempt is made in this thesis to include flexibility and controllability objectives formally in the synthesis of heat and mass integrated process systems. A unified representation scheme is introduced first, to describe integration and synthesis alternatives based on a superstructure realization of the synthesis problem. Operability objectives are posed and connected to structural and operational decisions.

In the second part, operability studies and design for flexibility and controllability are focussed on heat exchanger networks (HENs), which represent a major part of integrated systems. A systematic framework is proposed for the synthesis and retrofit design of HENs, where structural and operational alternatives are considered, evaluated and optimised simultaneously based on their economical *and* operational potential.

In the third part, process integration alternatives are extended to include mass integration possibilities. The synthesis of mass exchange networks (MEN) for waste treatment or improved economic process performance is studied, independently and in conjunction with heat integration. The synthesis framework for economically optimal and flexible integrated systems is thereby extended to the case of mass and heat integrated processes.

Finally, the unified representation framework for integration alternatives is generalized to represent total process flowsheet alternatives. Heat and mass transfer principles are utilised to describe unit operations such as distillation, reaction, or even non-conventional hybrid systems. Hence a synthesis/representation framework is introduced that may form the basis for systematically synthesizing optimal and operable process systems, where structural and operational alternatives are not only efficiently identified and optimised, but simultaneously created based on simple physico-chemical fundamentals.

Process Synthesis with Operability Considerations: Representation Issues

Chapter 1

Process Representation: Mass/Heat Exchange Hyperstructure Module

Mass and heat integration alternatives are modelled through a two-exchange-block hyperstructure module in section 1.1. Process operations are viewed within the proposed process representation in section 1.2.

1.1 Mass/Heat Exchange Network Hyperstructure

A superstructure representation framework is developed in this thesis to describe process heat and mass integration alternatives. The superstructure representation of process alternatives has become a favourable approach since it provides a systematic basis for the evaluation and optimization of synthesis alternatives, especially with the evolution of mathematical programming techniques (Grossmann and Daichendt, 1994).

Since process tasks are easier to model separately, most of the work in the superstructure optimization focussed on the synthesis of subsystems, such as heat exchanger networks (HENs), distillation sequences, reactor networks etc. In the area of heat exchanger networks, synthesis alternatives have been explored in a systematic manner through the development of HEN superstructures (Ciric and Floudas, 1991; Yee and Grossmann, 1990). In reactor networks, superstructure representations have been developed based on serial recycle reactor modules, with or without bypass stream, coupled or not with heating/cooling blocks (Chitra and Govind, 1985; Achenie and Biegler, 1990; Kokossis and Floudas, 1994). Sharp-split and non-sharp split separation

of multicomponent mixtures has been modelled based on a column-building block, where separation tasks are preassigned to columns (Floudas, 1987; Floudas and Paules IV, 1988; Sargent and Gaminibandara, 1976; Wehe and Westerberg, 1987; Quesada and Grossmann, 1993).

Conceptually, mass and heat integration in process operations involve mass and heat transfer phenomena, concerning mainly the mass transfer of a component from one substance or phase to another. For example:

- in solvent regeneration, the solvent mass is transferred between two immiscible streams.
- in heat integration of distillation columns, heat is transferred from the top product stream of one column to the bottom product of the other.
- in distillation, mass and heat are transferred between vapour and liquid contacting phases of a mixture.

Within the mass/heat transfer context of process operations that involve mass/heat integration one can distinguish components of interest, the concentration of which in one stream increases, while in another stream decreases. It will be shown later that process operations in general may be viewed as sets of mass (and heat) exchangers between two properly defined sides, a "rich" side (decreasing concentration) and a "lean" side (increasing concentration).

In order to capture mass and heat transfer phenomena in process mass and heat integration, a two-exchanger module is proposed to form the building block of a network superstructure of process integration alternatives (see Figure 1.1). It comprises a pure heat exchange block, where streams do not come into active contact and a mass-and-heat exchange block, where mass transfer direction (rich to lean side) is defined by a set of components of interest.

Based on the mass/heat exchange hyperstructure module, a network hyperstructure is developed:

- considering all possible heat and mass/heat exchange matches (depending on the synthesis task, as shown later) between process streams and utilities that participate to the network integration
- assigning side mixers and splitters to each exchange block (see Figure 1.1) and

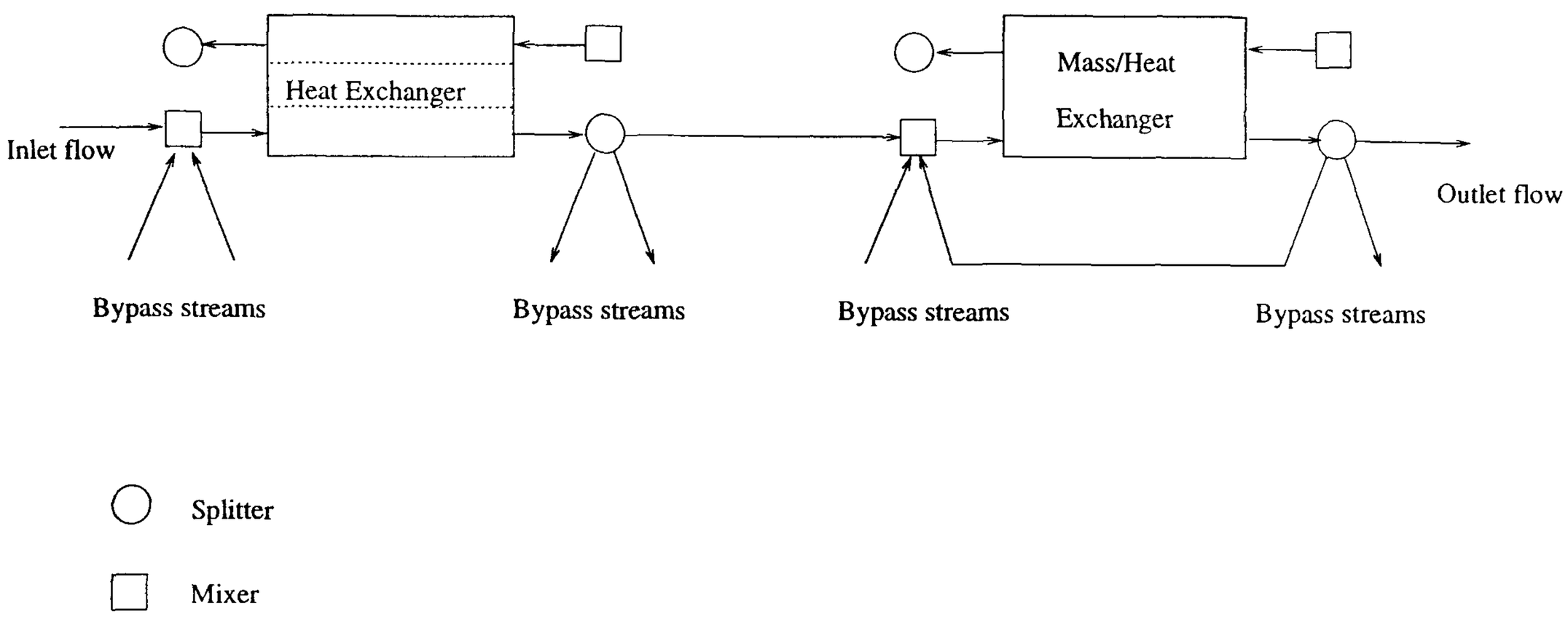

Figure 1.1: Multipurpose Mass/Heat Exchange Hyperstructure Module

– considering all possible interconnections between exchangers.

An initial splitter is also considered for each existing stream and a final mixer for each process stream.

The mass/heat exchange hyperstructure is mainly described by mass and energy balances and thermodynamic constraints, that ensure the existence of a driving force for mass/heat transfer.

As it has been defined, the mass/heat exchange hyperstructure module concerns the phenomena of heat and mass/heat transfer ("exchange") and each exchange block may correspond to an independent unit or be part of a more complex process unit. For example a mass exchange block where H_2S is absorbed from aqueous ammonia out of a COG mixture (a mixture of H_2, CH_4, CO, N_2, NH_3, CO_2 and H_2S) may correspond to a perforated-tray absorption column or to one tray only. If only heat recovery is of interest, one can consider only the heat exchange possibilities between hot and cold process streams and available utilities and assign each heat exchange block to a simple heat exchanger. Then the classical HEN hyperstructure of Ciric and Floudas (1991) results.

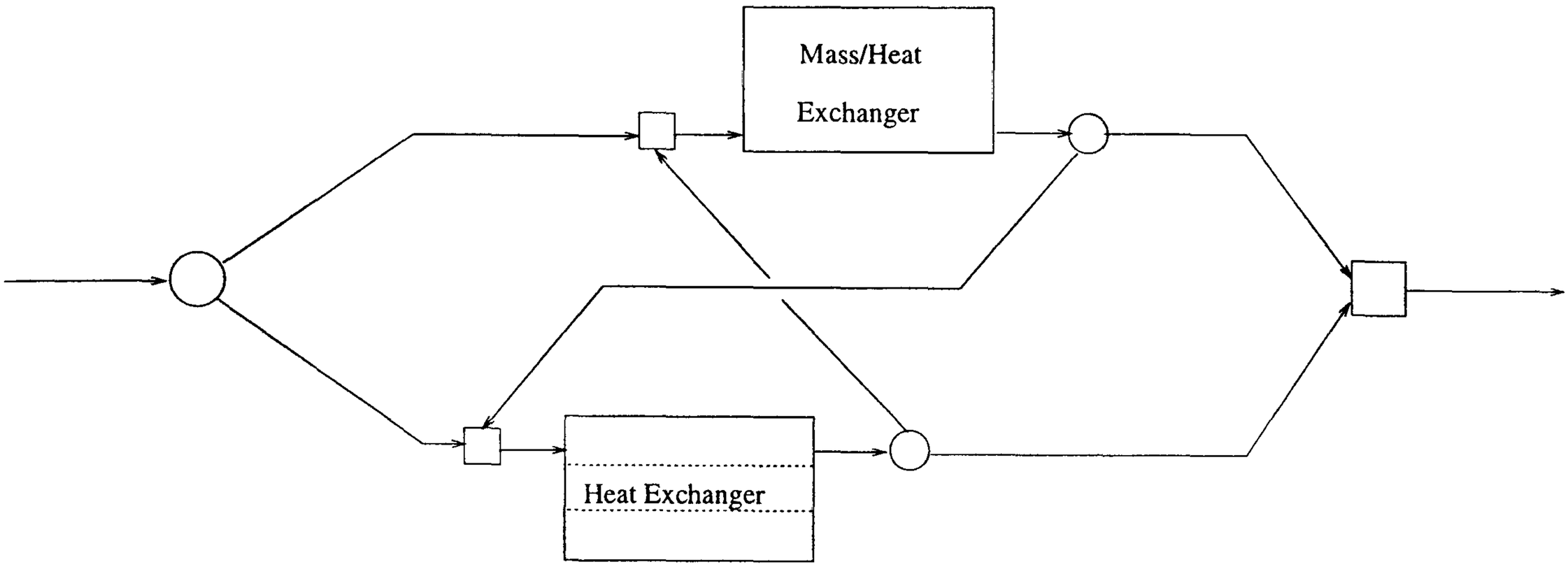

Figure 1.2: Network Configurations - I

1.2 Process Operation within Mass/Heat Exchange Hyperstructure

The mass/heat exchange hyperstructure includes all possible structural and operational alternatives for a process network. Parallel exchanger configurations and configurations in series (see Figures 1.2 and 1.3) can result by proper deletion of streams, corresponding to structural/decision variables. Each exchanger, mixer and splitter are fully defined by stream flows, temperatures and compositions and described by a set of mass and energy balances. Hence, in each subnetwork one can *a priori* determine the number of optimization variables (degrees-of-freedom analysis), based only on the network structure. This can be of great importance in operability studies since:

- structures with no manipulated variables (probably inoperable) may be fathomed out straightforwardly
- control structures can be studied simultaneously, as illustrated in Chapter 3.

Furthermore, split fractions and utility loads (which constitute the main manipulating variables in a network) may be adjusted and optimized simultaneously according to operability and/or economic requirements.

Thus, the hyperstructure representation framework provides a powerful tool, not only to explore synthesis alternatives towards an optimal network performance, but to introduce operability

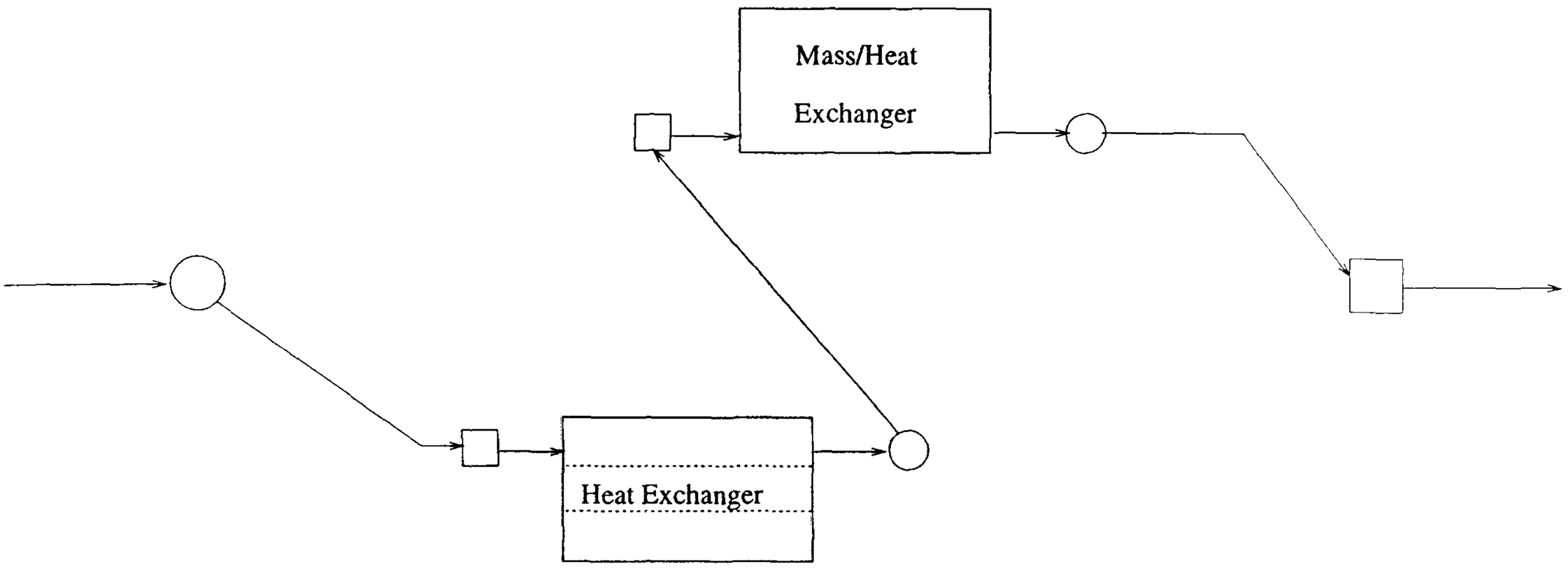

(a) Exchangers in series - I

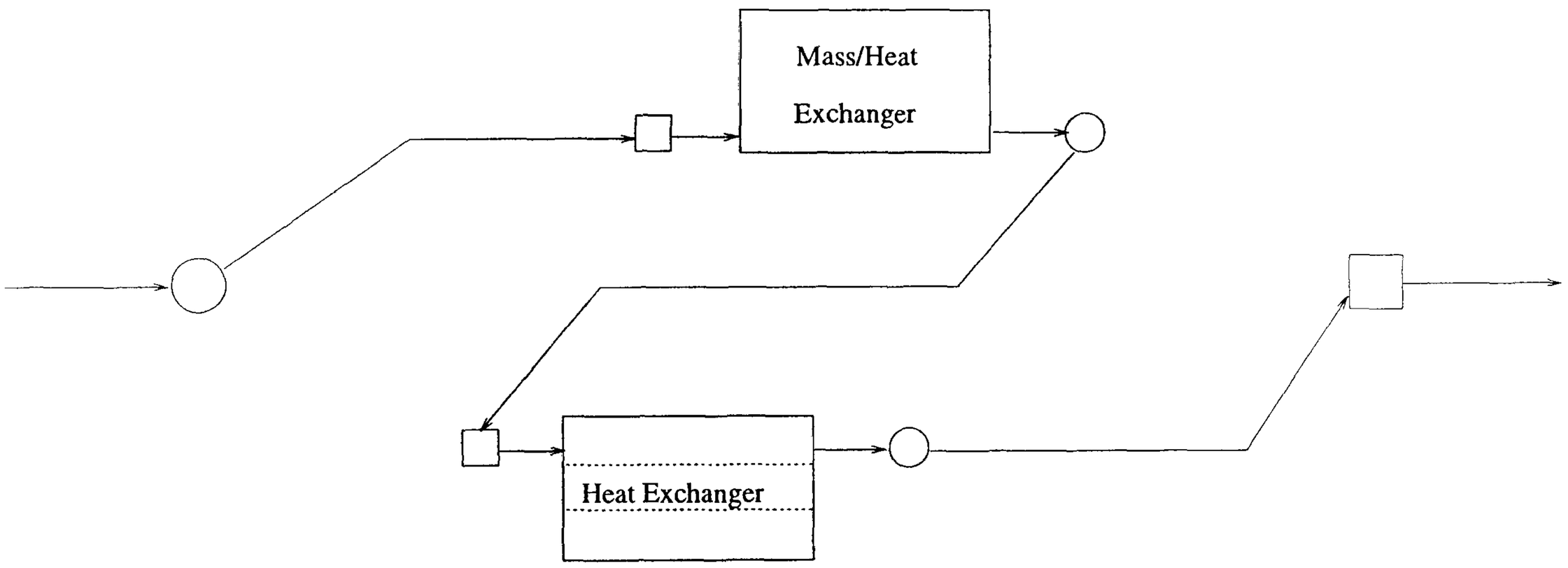

(b) Exchangers in series - II

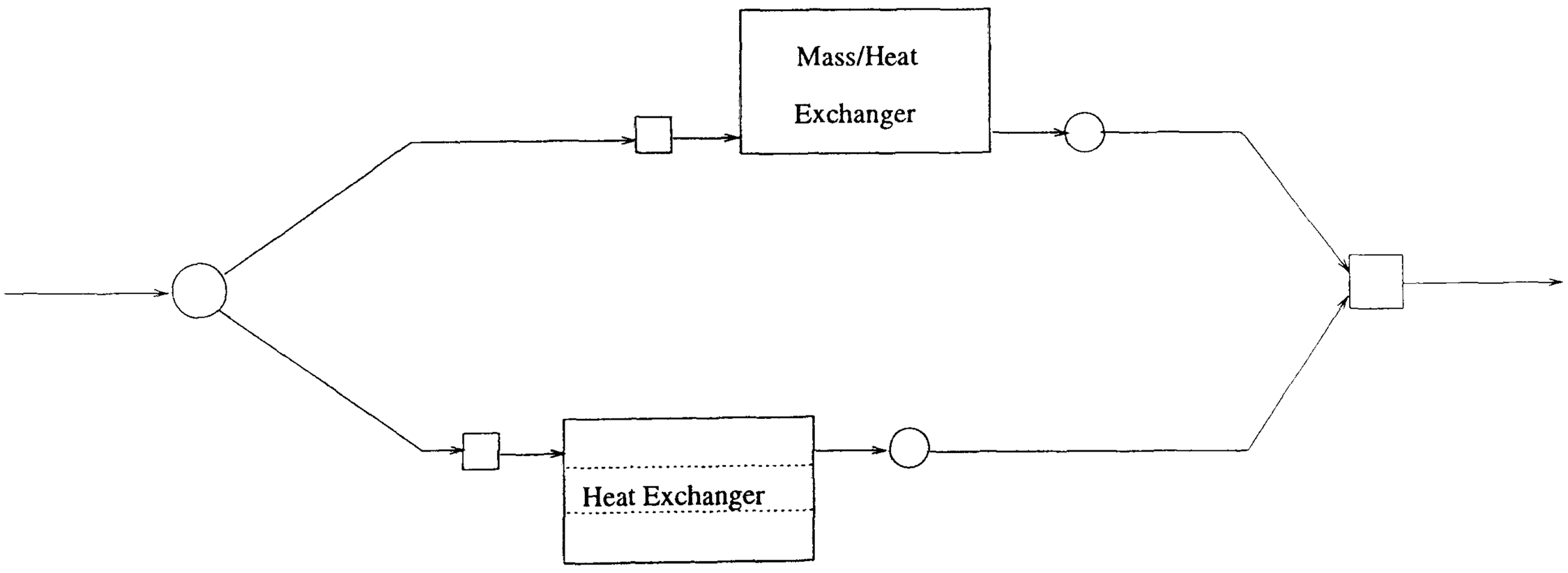

(c) Exchangers in parallel

Figure 1.3: Network Configurations - II

considerations in the synthesis objectives.

In the next part the problem of heat recovery system synthesis (and retrofit design) with flexibility requirements is first addressed, where the mass/heat exchange hyperstructure is reduced to include only heat exchange blocks.

Operability in Heat Exchanger Networks

Chapter 2

Flexibility Aspects in HENs Synthesis and Retrofit Design

Synthesis and retrofit design of HENs with flexibility objectives are addressed in this chapter. The problem is formulated as an optimization problem (section 2.3) and an iterative procedure is proposed for its solution. A multiperiod hyperstructure of heat exchange alternatives is then presented. The HEN synthesis/retrofit model for multiperiod operation is then described (section 2.5) and a solution method is proposed (section 2.6). Example problems are presented in section 2.7. Finally, explicit flexibility constraints are introduced in the synthesis model, for a special class of HEN synthesis problems (section 2.8).

2.1 Introduction

The design of heat recovery systems, where the integration of hot and cold process streams reduces the utility consumption for the plant cooling and heating requirements, and, thus, operating cost, has been one of the most mature research fields, with the main objective being maximum energy recovery at low investment cost. Gundersen and Naess, in their review paper (1988), include over 200 publications for the heat exchanger network synthesis problem. One can distinguish the sequential approach (heuristics or thermodynamics based), where bounds or targets are introduced to the complex combinatorial problem of HENS for energy recovery, heat transfer area, number of units, total cost (most recent work by Ahmad *et al.* (1990) and Colberg and Morari (1990)). On the other hand, the development of new and rigorous mathematical programming techniques led to effective mixed integer nonlinear programming (MINLP) models for the simultaneous synthesis of heat exchanger networks (Ciric and Floudas, 1991; Yee and Grossmann, 1990). Floudas and

Ciric (1988) were the first to study the HEN synthesis problem considering a variable number of units at the design level. They proposed a generalized match-network hyperstructure where one-to-one assignment of heat exchangers to stream matches is considered, whereas Yee and Grossmann introduced alternative superstructures based on a stage-wise network representation (1990) and on an one-to-many relationship between units and stream matches (1991). In a review paper, Gundersen *et al.* (1991) summarize the characteristics and limitations of both the sequential and the simultaneous approach.

The retrofit of heat exchanger networks has become an important problem since plant specifications may typically alter. Grossmann *et al.* (1987) and Gundersen (1989), in their review papers, pointed out that the retrofit design problem is different and more complex that the grassroot design problem. Still, grassroot design concepts can be used as guidelines, however without fully accounting for the existing equipment and piping layout. Yee and Grossmann (1987) were the first to address the issue of reassigning exchangers. They developed an MILP assignment/transshipment model to predict the fewest structural modifications needed in order for an existing network to achieve a certain level of energy recovery (HRAT). An improved approach by Yee and Grossmann (1991) involves two stages: i) a prescreening stage, where a superstructure of potential economical and feasible alternatives is generated and lower bounds for utility consumption, additional area and structural modifications are calculated as a function of HRAT, and ii) an optimization stage, where a superstructure based on the information of the prescreening stage is set up. Ciric and Floudas (1990) extended the work of Papoulias and Grossmann (1983), Floudas *et al.* (1986) and Yee and Grossmann (1987) by further categorizing the levels of structural modifications, focussing on area requirements. In their two-stage approach stream matches and heat load distribution are determined by an MILP transshipment model, while a NLP model determines the final retrofitted network configuration. The same authors (1990) extended the generalized match network hyperstructure concept to the retrofit case and proposed an MINLP retrofit model where the hyperstructure model is coupled with a transshipment heat flow model, an assignment model and rating equations for calculating additional required area.

Although synthesis and retrofit design of heat exchanger networks have been addressed in a systematic way, most of the approaches outlined above can be mainly applied for fixed operating conditions. When operating conditions vary, the framework of flexibility index evaluation can in principle be employed to assess the ability of the heat exchanger network to accommodate the uncertainty. For the deterministic case, when uncertainty is provided through a range, Swaney and

Grossmann (1985) introduced the flexibility index, which defines the maximum parameter range that can be achieved for feasible operation. Saboo *et al.* (1985) proposed an alternative metric, denoted as resilience index, to measure the size of the feasible region of a heat exchanger network. Grossmann and Floudas (1987) presented an active set strategy for the efficient computation of the flexibility index of Swaney and Grossmann. For the case when uncertainty is described by a joint probability distribution function, Pistikopoulos and Mazzuchi (1990) and Straub and Grossmann (1990) introduced a stochastic flexibility index, with which the probability of feasible operation can be determined.

Despite its importance, however, the problem of incorporating flexibility aspects in the (re)-design and synthesis of heat exchanger networks has received rather limited attention in the literature. Kotjabasakis and Linnhoff (1986) proposed an evolutionary design approach, where the trade-offs between flexibility-capital cost-operating cost are exploited based on information obtained from "Sensitivity Tables", and decisions are taken on design variables which are connected through a "downstream path" with the uncertain parameters (disturbances). Colberg and Morari (1988), following the work of Saboo and Morari (1984), proposed a flexibility index "target" approach, where the target corresponds to the case of the complete disappearance of a stream. For the "Class-1" convex HEN problems, they proposed a synthesis procedure which first involves the evaluation of the "Class-1" Flexibility Index Target and the identification of "ultimate resilience bottlenecks" for the extreme cases of maximum cooling and maximum heating. Maximum resilience can then be achieved mimicking the composite curves around the nominal pinch as well as around the detected "bottlenecks". Target temperatures are maintained through the placement of heaters and coolers, whereas the number of units is reduced via the application of the loop breaking rule. Calandranis and Stephanopoulos (1986) proposed an operability analysis for HENs, based on structural information, where uncertain network parameters are addressed as disturbance loads propagated in the network. Useful guidelines are provided to reduce the problem dimensionality and to identify possible non-convexities and how they affect the network behaviour. A designer-driven approach is proposed to improve HEN operability depending on its importance to HEN performance.

A systematic approach to the problem of optimal retrofit of existing plants in order to improve their flexibility has been proposed by Pistikopoulos and Grossmann (Pistikopoulos and Grossmann, 1988; Pistikopoulos and Grossmann, 1989). Their developed procedures, however, cannot be readily applied to synthesis or retrofit of HEN if network structures, exchanger assignments and topology

modifications are to be taken into account.

Floudas and Grossmann have developed a systematic procedure for automatically synthesizing heat exchanger networks which are capable of accommodating a specified range of uncertain stream temperatures and flowrates (Floudas and Grossmann, 1986; Floudas and Grossmann, 1987). Their approach relies on a two-stage iterative scheme between a multiperiod synthesis problem and a flexibility analysis step, both at the level of matches and network structure. At the first stage, a heat exchanger network is synthesized for a set of operating conditions at the level of matches (multiperiod transshipment model). Then, a feasibility test is performed and further critical points may be considered until the resulting combination of matches is guaranteed to be feasible over the entire parameter range. At the second stage, for the detected critical periods of operation and feasible stream matches, a network structure is obtained through the postulation of a multiperiod superstructure and the optimization of the corresponding NLP model. This network structure is feasible for each period of operation and features minimum number of units, minimum investment cost (given the predicted number of units) and minimum utility cost for each period. Further iterations between the synthesis subproblem and a flexibility index evaluation step are required to finally obtain a flexible heat exchanger network.

Cerda and coworkers proposed a different synthesis methodology for obtaining flexible heat exchanger networks (Cerda *et al.*, 1990; Cerda and Galli, 1990; Galli and Cerda, 1991) . They introduced the concept of "transient" and "permanent" process streams in order to describe the variations in inlet temperatures and flowrates. Based on a novel heat cascade representation, a discrete set of dominant pinch points is identified with which the optimal heat load distribution is obtained through the solution of an MILP problem. The network structure is then generated and a "pinch-jump" test is performed for its assessment. Heaters and coolers are then properly placed and a near-optimal heat exchanger network is obtained.

The design and retrofit design attempts to improve the flexibility of a heat exchanger network, with the exception of the two-stage iterative approach by Floudas and Grossmann, have mostly relied on heuristics and ad-hoc methods. Consequently, they cannot guarantee "optimal" HEN designs. However, the decomposition scheme, applied at the synthesis step (Floudas and Grossmann, 1987), leads to network structures that feature maximum energy recovery but not necessarily economic optimality. A simultaneous consideration of all cost factors for the HEN design problem might lead to different network structures, more economical and with the same degree of flexibility.

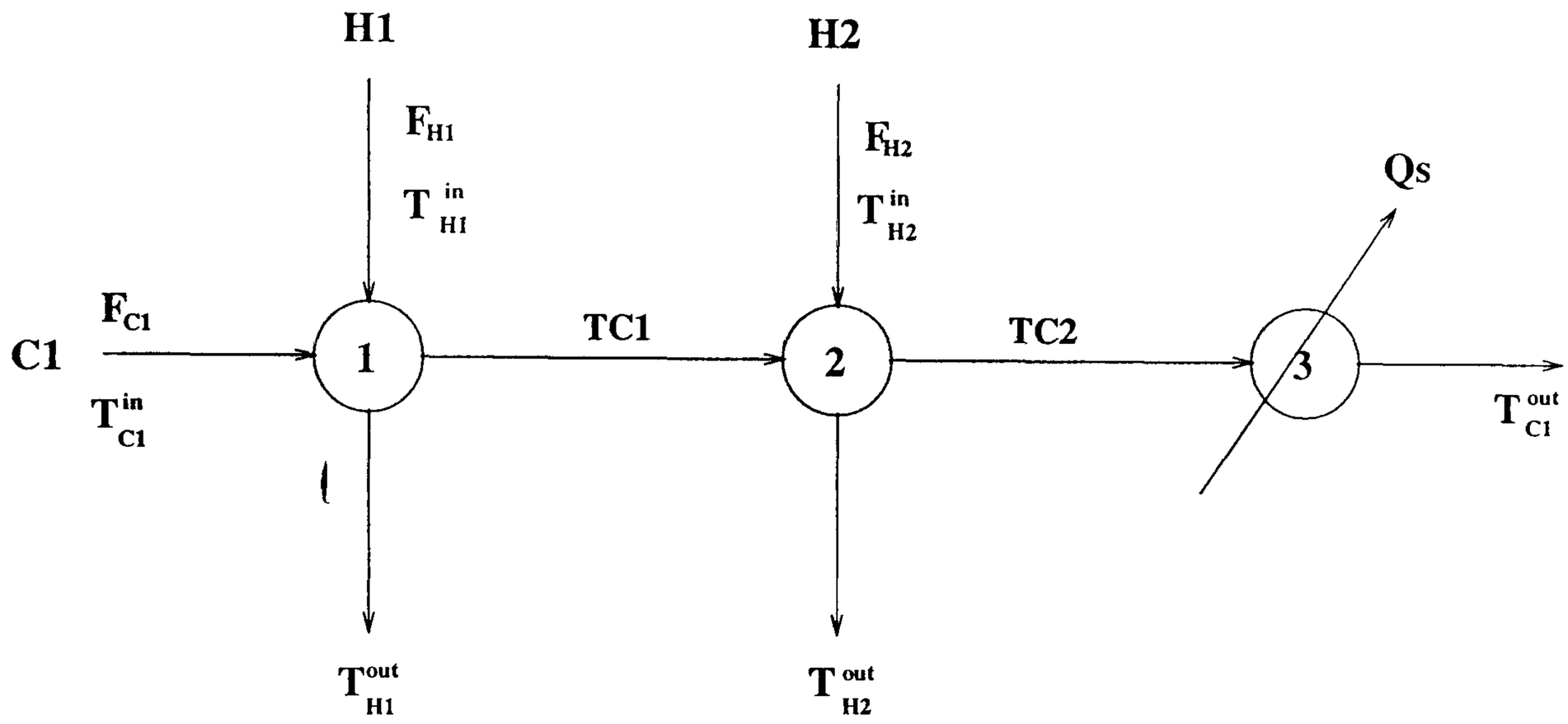

Figure 2.1: Motivating heat exchanger network

Stream	$Fcp(KW/^oC)$	$T^{IN}(^oC)$	$T^{OUT}(^oC)$
H1	3	250	115
H2	4	360	200
C1	6.8	65	310

Table 2.1: Stream data for motivating example

The reduced Mass/Heat Exchange hyperstructure to the HEN case is extended here towards this direction. The multiperiod approach of Floudas and Grossmann is employed and the hyperstructure operational parameters are realized for different operating "periods". Both the synthesis and the retrofit design problems are considered.

2.2 HEN Synthesis and Retrofit Design for Flexible Operation

To motivate the problem addressed here consider the HEN illustrated in Figure 2.1 (Georgiou and Floudas, 1989a). It involves two hot and one cold process streams integrated in two exchangers, whereas a heater provides the additional required heat for the outlet temperature of $C1$ to reach its target. The network results from a simultaneous optimization of utility consumption and area cost. Steam and exchanger data are given in Tables 2.1 and 2.2 (nominal operation).

Exchanger	Area(m^2)	$U(KW/m^{2\circ}C)$
1	49.37	0.1
2	60.97	0.1

Table 2.2: Exchanger data for motivating example

Process interactions result in the hot stream flow rates varying in the following range of uncertainty:

$$2\ KW/^\circ C \leq F_{H1} \leq 4\ \ KW/^\circ C$$

$$3\ KW/^\circ C \leq F_{H2} \leq 5\ KW/^\circ C$$

Feasible operation is determined by a minimum temperature approach $\Delta T_{min} = 10^\circ C$ at the two ends of each exchanger and heat exchanger area adequacy. Taking into account the energy balances around the heat exchangers and expressing $TC1$ and $TC2$ (see Figure 2.1) as function of the uncertain parameters the following set of constraints result:

$$\begin{aligned}
f_1 &= F_{H1} - 8.8148 && \leq 0\\
f_2 &= F_{H1} - 6.2963 && \leq 0\\
f_3 &= F_{H1} + 1.1852F_{H2} - 14.3536 && \leq 0\\
f_4 &= F_{H1} - 3.02774 && \leq 0\\
f_5 &= 160F_{H2} - \frac{6.097(-19.7059F_{H1} + 160(1 - 0.1471F_{H2}))}{ln(1 + \frac{160(1 - 0.1471F_{H2})}{135 - 0.1471F_{H1}})} && \leq 0
\end{aligned}$$

$f1 - f3$ correspond to $\Delta T_{min} = 10^\circ C$ constraints, whereas $f4$ and $f5$ refer to area adequacy in exchangers 1 and 2 respectively. $f4$ is a simplified expression of the initial constraint where the ln-terms have been approximated.

A flexibility analysis of the network reveals that it is not able to operate when F_{H1} fluctuates more than 0.022% to the positive direction ($FI = 0.00022$) due to area inadequacy at exchanger 1 (see Figure 2.2, where the feasible region of the network is illustrated). The operating conditions of greater violation are defined by

$$F_{H1} = 4\ kW/K \qquad 3\ kW/K \leq F_{H2} \leq 5\ kW/K$$

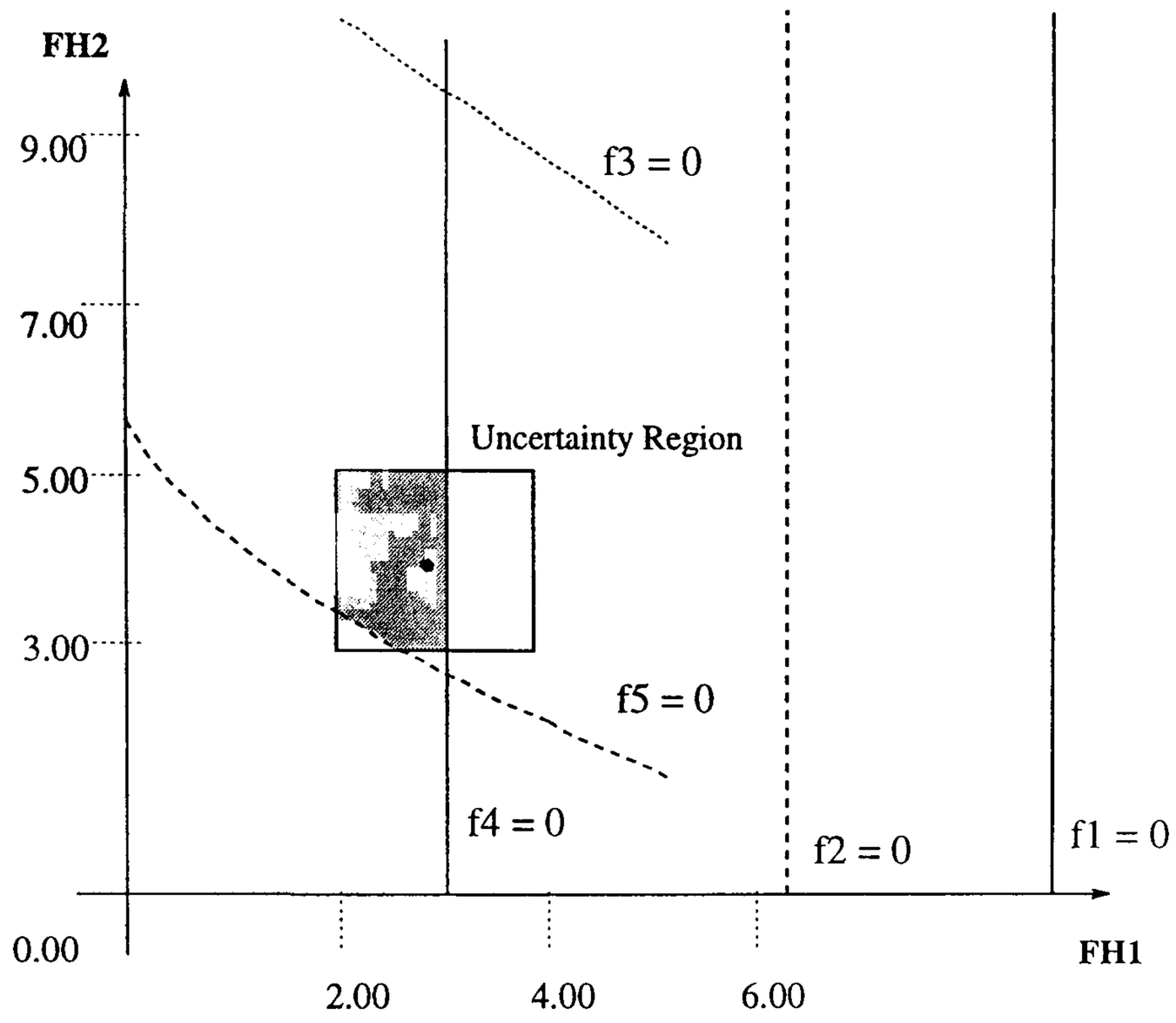

Figure 2.2: Uncertainty region and feasible operation

The following questions then arise:

- how could we have synthesized and designed the network so as it is flexible over the specified uncertainty space and still economically optimal
- how to redesign the existing network so as to satisfy the flexibility requirements at minimum retrofit cost, exploiting the trade-offs between operating cost and retrofit investment cost (in terms of area overdesign, bypass placement, exchanger reassignment etc.)

The above problem can formally be stated as follows:

Given:

- *Stream integration data*
  - In the case of synthesis, these involve a set **H** of hot process streams, a set **C** of cold process streams and a set of hot and cold utilities **HU** and **CU**, respectively.

– In the case of retrofit design, the *existing network* is also given, in terms of heat exchangers (a set **X** of existing exchangers with known area **EA**) and network topology.

The heat capacity flowrates **F**, inlet temperatures $\mathbf{T}^I$ of process streams and/or the heat transfer coefficients **U** are not fixed. They either vary within a range of values, $\{\mathbf{F}^{LO}, \mathbf{F}^{UP}\}$, $\{\mathbf{T}^I_{LO}, \mathbf{T}^I_{UP}\}$, $\{\mathbf{U}^{LO}, \mathbf{U}^{UP}\}$ respectively, or are described by discrete sets of values $\mathbf{F}(T)$, $\mathbf{T}^{\mathbf{I}}(T)$, $\mathbf{U}(T)$ defining multiperiod operation (in T periods). The outlet stream temperatures $\mathbf{T}^{\mathbf{O}}$ are fixed (either for each period of operation or uniquely) or constrained through some specification.

- a specified range for the uncertain parameters, where flexibility of the network is desired (*flexibility target*).

- a *minimum temperature approach* ΔT_{min} to determine feasible heat exchange in *each heat exchanger* (not utility consumption as HRAT).

The objective is then,

(*i*) in the **synthesis case**, to *synthesize a heat exchanger network*

(*ii*) in the **retrofit case**, to *determine a retrofit design*

- at *minimum total (synthesis or retrofit) annualized cost* (operating and capital investment cost).

- able to *operate feasibly* under the specified uncertainty.

In this work feasible operation of heat exchanger networks under specified range of uncertain parameters is assessed via the flexibility index evaluation (Swaney and Grossmann, 1985). The desired range of operation of the network defines a *flexibility index target*, F^T.

The following assumptions are made:

1. The heat exchangers are of the countercurrent type.

2. No phase changes are allowed.

3. Constant heat capacities are considered.

4. No hot-hot or cold-cold matches are allowed.

5. Area cost does not depend on the number of shells.

In Chapter 6, a general process synthesis framework is presented, where, when applied to heat integration, assumptions 2,3 and 4 are relaxed and HEN synthesis problems may involve phase change, temperature dependent heat capacities and hot-hot (and/or cold-cold) stream matches if necessary. Assumption 5 could be relaxed through the approach of Trivedi *et al.* (1987).

2.3 Synthesis and retrofit design strategy

A heat exchanger network can be described by a set of equations and inequality constraints, corresponding to mass and energy balances and ΔT_{min} and area constraints (see Appendix A). Let us denote by:

V_θ , the set of the uncertain parameters of the network,

$U(V_\theta)$, the specified range of uncertainty where flexibility is desired,

V_d , the set of its design variables, *i.e.* the heat exchanger areas and the variables defining the topology of the network (matches, piping layout etc.),

V_x , state variables that describe the network operation,

V_z , control variables corresponding to degrees of freedom at the design stage.

Also, let $h(V_\theta, V_x, V_z, V_d)$ be the set of equations describing the network (mass and energy balances) and $f(V_\theta, V_x, V_z, V_d)$ the set of inequality constraints (ΔT_{min} and area constraints). The synthesis and retrofit design problems with flexibility requirements can be formulated as optimization problems of the following form:

- Synthesis of HEN

$$\min_{V_d, V_x, V_z} \quad \text{(total annualized synthesis cost)}$$

$$s.t. \qquad h(V_\theta, V_x, V_z, V_d) = 0$$

$$f(V_\theta, V_x, V_z, V_d) \leq 0 \qquad \forall V_\theta \in U(V_\theta) \qquad \textbf{(SP)}$$

- Retrofit of HEN

$$\min_{\Delta V_d, V_x, V_z} \text{(total annualized retrofit cost)}$$

$$\begin{aligned} s.t. \qquad h(V_\theta, V_x, V_z, V_d) &= 0 \\ f(V_\theta, V_x, V_z, V_d) &\leq 0 \end{aligned} \qquad \forall V_\theta \in U(V_\theta) \qquad \textbf{(RP)}$$

As it has been shown (Halemane and Grossmann, 1983), the flexibility requirements ($\forall V_\theta \in U(V_\theta)$) in problems **(SP)** and **(RP)** are equivalent to an inequality constraint that involves a $\max - \min - \max$ problem :

$$\max_{V_\theta \in U(V_\theta)} \min_{V_z} \max_{j \in J_f} f_j(V_\theta, V_x, V_z, V_d) \leq 0$$

$$s.t. \qquad h(V_\theta, V_x, V_z, V_d) = 0$$

Consequently, problems **(SP)** and **(RP)** can equivalently be written as:

$$\min_{(\Delta)V_d, V_x, V_z} \text{(total annualized cost (synthesis or retrofit))}$$

$$s.t. \qquad \chi(V_d, U(V_\theta)) = \max_{V_\theta \in U(V_\theta)} \min_{V_z} \max_{j \in J_f} f_j(V_\theta, V_x, V_z, V_d) \leq 0$$

$$s.t. \qquad h(V_\theta, V_x, V_z, V_d) = 0 \qquad \textbf{(PF)}$$

The feasibility function $\chi(V_d, U(V_\theta))$ of the heat exchanger network determines whether for each realization V_θ of uncertain parameters there exists (if $\chi(V_d, U(V_\theta)) \leq 0$) or not (if $\chi(V_d, U(V_\theta)) > 0$) a set of control variables V_z, that can be selected during HEN operation to satisfy each one of the constraints f_j. The solution of the $\max - \min - \max$ problem corresponds to the uncertainty point where the feasible region is smallest (if $\chi \leq 0$) or it is the point where maximum constraint violation occurs (if $\chi > 0$).

Note that problem **(PF)** is an optimization problem which includes as a constraint another optimization problem. It further involves two types of variables: 0-1 binary variables, to represent

potential structural changes of the network, and continuous variables. The direct solution of **(PF)** would require to express the inner max – min – max problem parametrically in terms of the design variables V_d. Instead of solving problem **(PF)** directly, one could first identify the HEN parameters which provide the flexibility bottlenecks in its operation, through the solution of the feasibility and/or flexibility index evaluation problem. This problem for the general case of HENs is described in detail in Appendix A. Then, by centering at these operational bottlenecks, a synthesis and/or retrofit model can be developed with the objective of at least ensuring feasible operation at these points, by synthesizing a network or properly enhancing the topology and design of the existing one at the minimum cost. Such a successive iterative scheme results in the synthesis/retrofit strategy illustrated in Figure 2.3. It involves the following steps:

Step 0. (i) Define a range for uncertain parameters, where feasible operation is desired.

(ii) In the **synthesis case**, determine a starting cost-optimal network, based on nominal operation.

(iii) In the **retrofit case**, set the existing network as the starting network structure.

Step 1. Flexibility/feasibility analysis. For the current network solve the feasibility test problem (problem **(FAP)** in Appendix A).

(i) If the current network satisfies the flexibility target, STOP. Otherwise, go to (ii).

(ii) Identify critical operating conditions (periods), corresponding to operating conditions of (maximum) constraint violation.

Step 2. Multiperiod synthesis/retrofit model.

(i) Generate multiperiod heat exchanger hyperstructure (based on nominal and critical operating periods) and develop synthesis/retrofit model.

(ii) Solve the model to obtain the "new" heat exchanger network structure. Go to step 1.

The basic advantage of the proposed retrofit strategy is that it avoids the direct consideration of the infinite number of constraints and operating points imposed, in principle, by problem **(PF)**. First, the activation of the feasibility analysis step detects whether the structure satisfies the flexibility target; otherwise, critical operating conditions are identified, which define (together with the nominal values) the periods of operation. The multiperiod MINLP synthesis/retrofit model

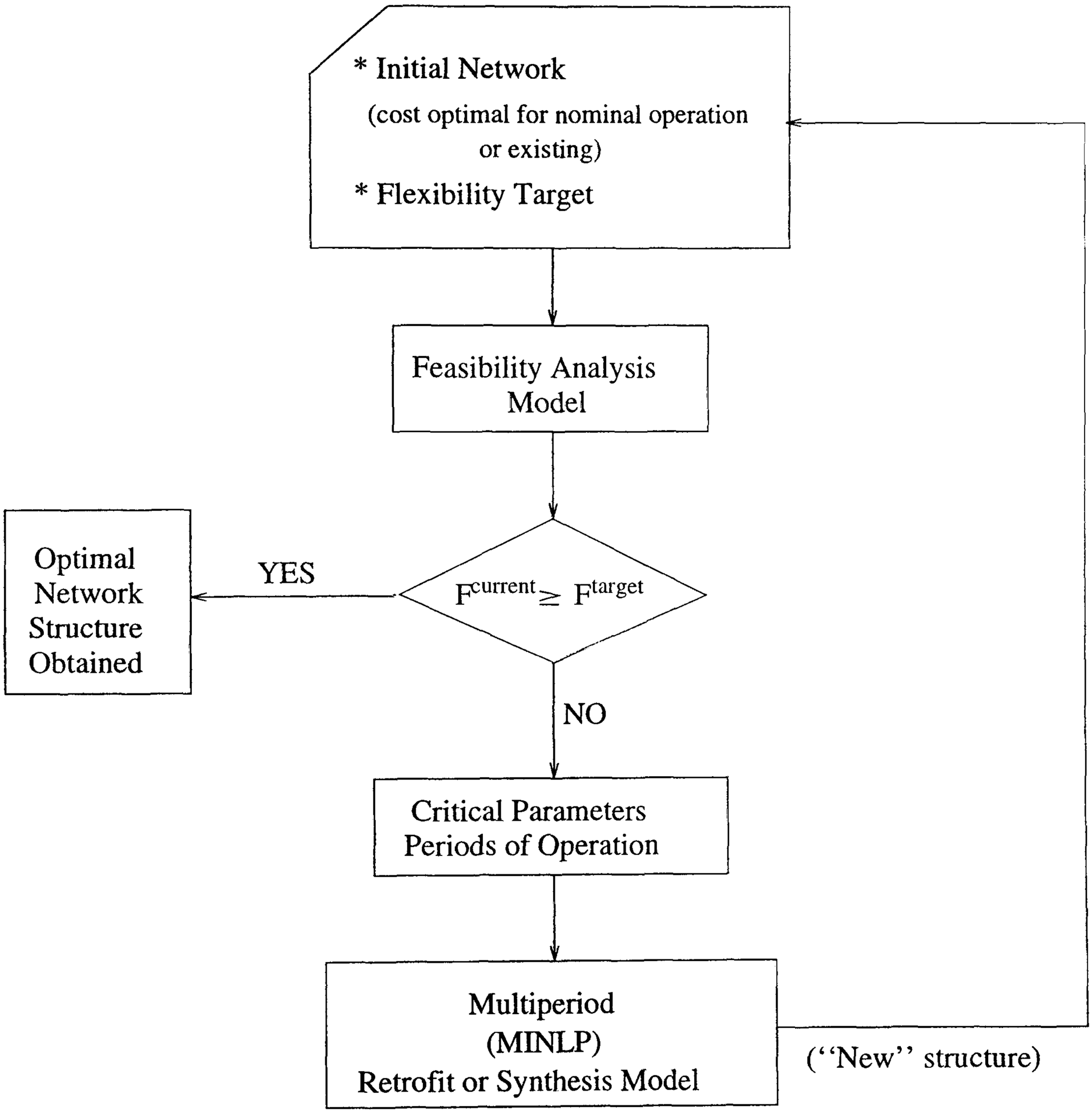

Figure 2.3: Iterative Synthesis/Retrofit Scheme for Flexibility in HENs

is then developed for the specified periods of operation, the solution of which provides a network that features minimum total annualized cost (synthesis or retrofit) while being able to operate in all periods. The "new" HEN is again tested for flexibility over the entire desired parameter range.

The proposed strategy is based on a discretization and in each iteration step critical points are added to the multiperiod model. Thus, in each step the synthesis/retrofit problem is augmented by constraints centered to the "critical" parts of the original network. Provided that the MINLP flexibility analysis subproblem is globally solved, Gustafson (1983) has shown for this class of problems, where a sequence of accumulation points is generated, that, in the limit, they converge to the optimal solution (for the flexibility part). In addition, if the synthesis/retrofit problem is globally solved, economical optimality will be also achieved. However, one cannot guarantee that the proposed algorithm will converge to the optimal solution in a finite number of iterations, unless one specifies a finite tolerance for the flexibility test. Nevertheless, the example problems later in this chapter indicate that usually a few iterations are required.

2.4 Multiperiod Hyperstructure Representation

The main building element of the proposed synthesis/retrofit framework for flexibility is the multiperiod HEN hyperstructure representation, where all the structural and operational alternatives for the network are included and realized for different operating periods. This HEN hyperstructure results from the mass/heat exchange hyperstructure, introduced in Chapter 1, considering only heat exchange alternatives and not allowing different stream mixing. Each heat transfer block corresponds to a potential heat exchanger unit, which in the retrofit case may be an existing heat exchanger or a new unit (to be purchased). Thus, the multiperiod hyperstructure involves an one-to-one relationship between heat exchanger units and stream matches and is an extension of the generalized hyperstructure of Floudas and Ciric (1988) to the multiperiod case (see Figure 2.4). Each stream entering the network is split towards each exchanger, to which the stream may contribute. The possibility of multiple heat exchange between two streams is taken into account, *i.e.* multiple potential exchangers for a stream match are considered whenever ΔT_{min} constraints prevent single heat exchange between two streams. This is not similar to an *a priori* network partition into subnetworks, since the final number of subnetworks is not determined by a prespecified pinch point, but by the economical evaluation of the multiple heat exchange compared to another heat load distribution. An overall bypass flow is also considered for each process stream. Prior

to each potential exchanger a mixer is considered for each stream, where the flow from the initial splitter and the bypass flows from all the other potential exchangers of the stream are merged into a flow towards the exchanger. This flow is further split before entering the exchanger, so that potential bypasses in each exchanger are taken into account and heat transfer area requirements are satisfied in each period of operation. After each heat exchange unit a splitter is also considered for each process stream, from which a potential flow is driven towards the final mixer of the stream at the network outlet, and bypass flows are considered towards the mixers prior to the other potential exchangers of the stream. Each exchanger load and each stream flow and temperature are considered for each period of operation. If multiperiod operation is realized explicitly, so that an exchanger unit may be allocated to different stream matches in different periods, match existence and exchanger allocation is defined for *each* operating period. Concerning the piping layout, a piping segment exists in the final network if the corresponding stream flow exists at least in one period of operation. Alternatively, structural binary variables may be defined for each piping segment (see Figure 2.5).

Yee and Grossmann (1991) considered one-to-many relationship between heat exchangers and stream matches in their proposed superstructure for the retrofit of heat exchangers. This representation, extended to the multiperiod case, may also be employed in the synthesis/retrofit framework of Figure 2.3. The multiperiod hyperstructure in this case also involves initial stream splitters, inlet and outlet exchanger mixers and splitters and final stream mixers. The flow to and out from each exchanger, as well as bypass flows from one exchanger to another are assigned to each exchanger (hot and cold side) for each period of operation and not to each stream. The number of exchangers that is considered is the total number of potential heat exchangers. In the retrofit case, when this number is greater than the existing units, then heat exchangers are to be purchased and their area is to be determined by assignment constraints and rating equations. Each stream entering the network is split to a flow towards each exchanger and an overall bypass flow. Assignment variables are considered to determine which stream is assigned to which heat exchanger. Thus, the mixers at the inlet of each exchanger combine the flows from all the initial splitters (for the hot and the cold side of the exchanger separately), as well as the bypass flows from all the other exchangers. The splitter at the outlet of each exchanger distribute the outlet flow from the exchanger to the final mixers of all streams and the inlet mixers of the rest exchangers. The piping layout is explicitly considered and each piping segment is assigned to a flow through properly defined binary variables.

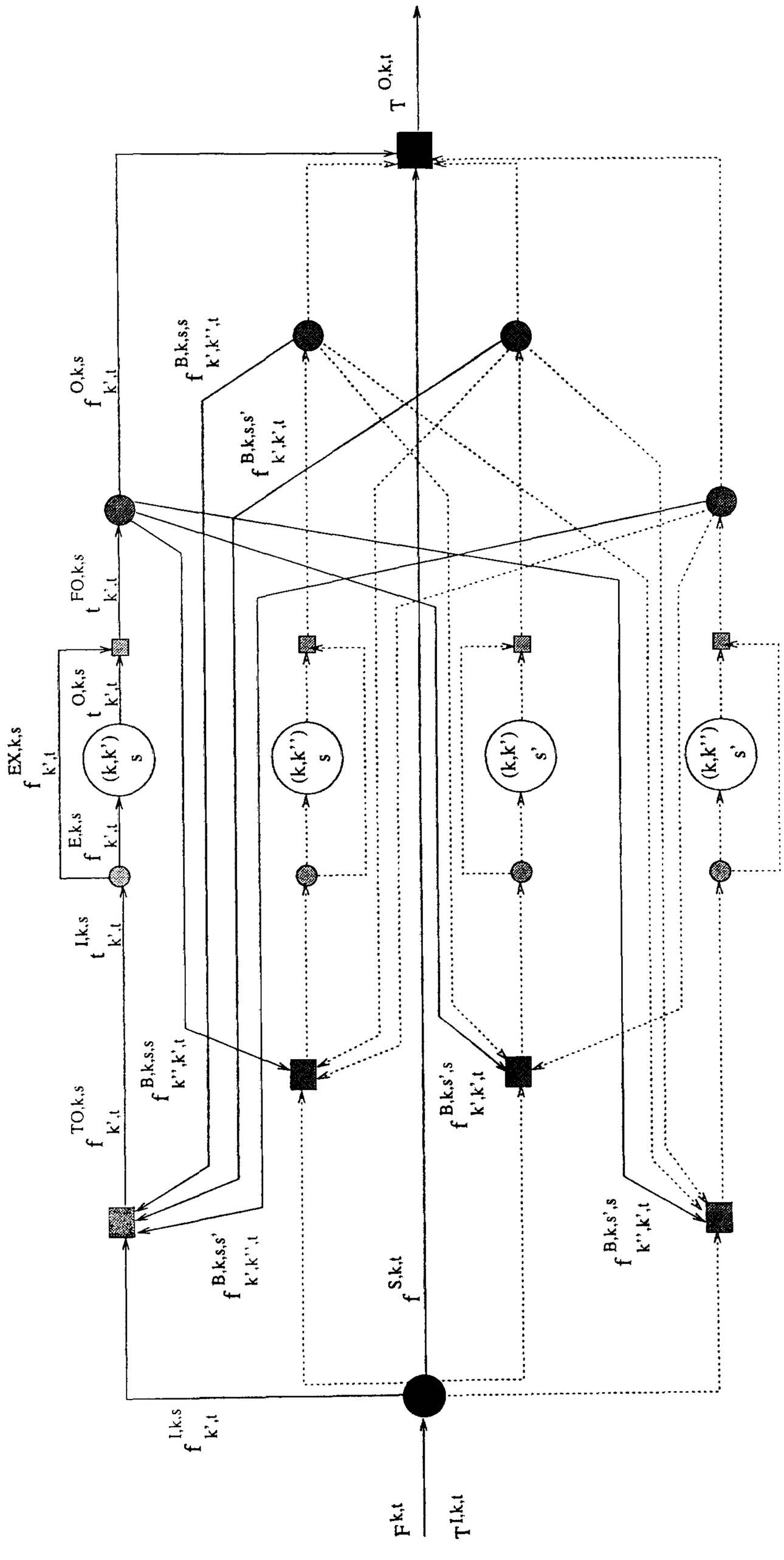

Figure 2.4: Multiperiod hyperstructure (one-to-one exchanger assignment)

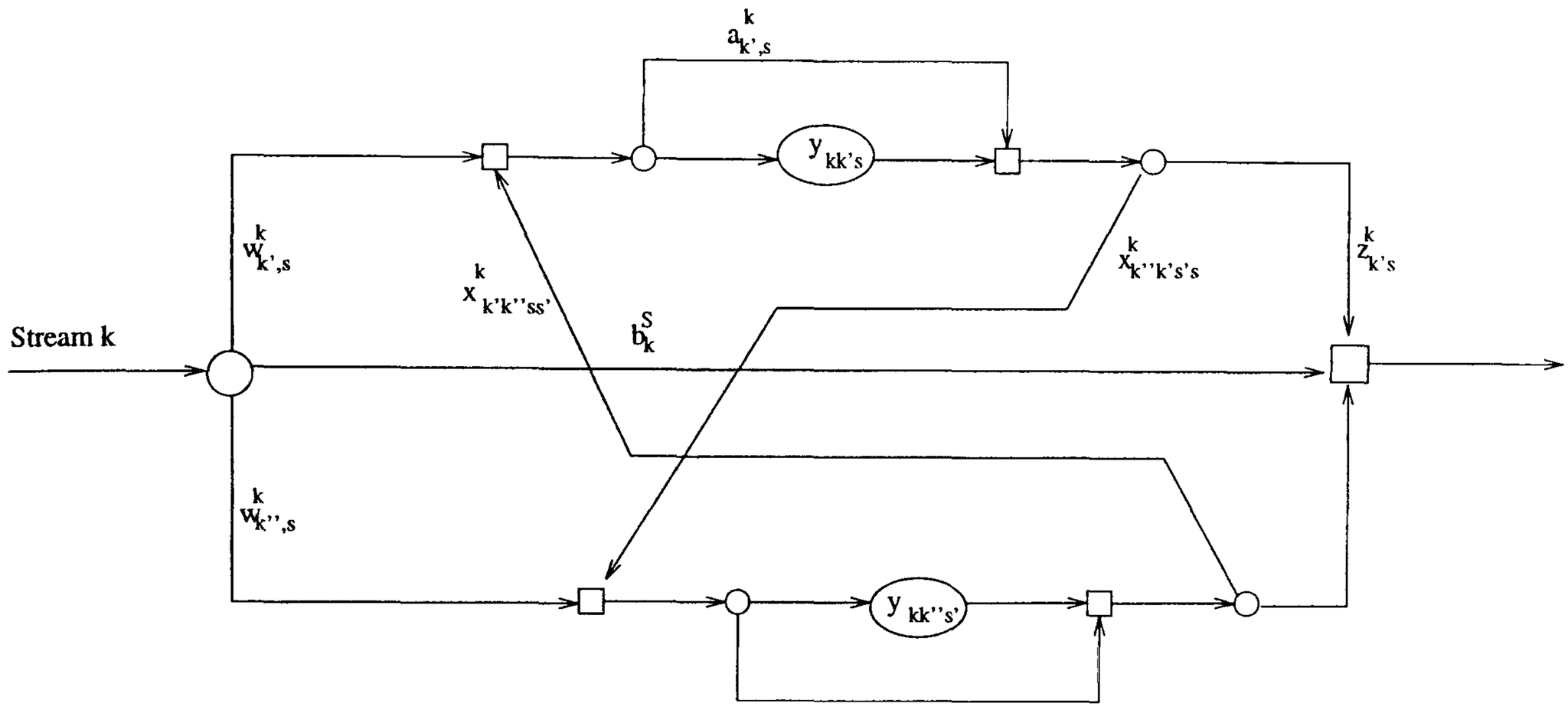

Figure 2.5: Hyperstructure network representation through binary variables

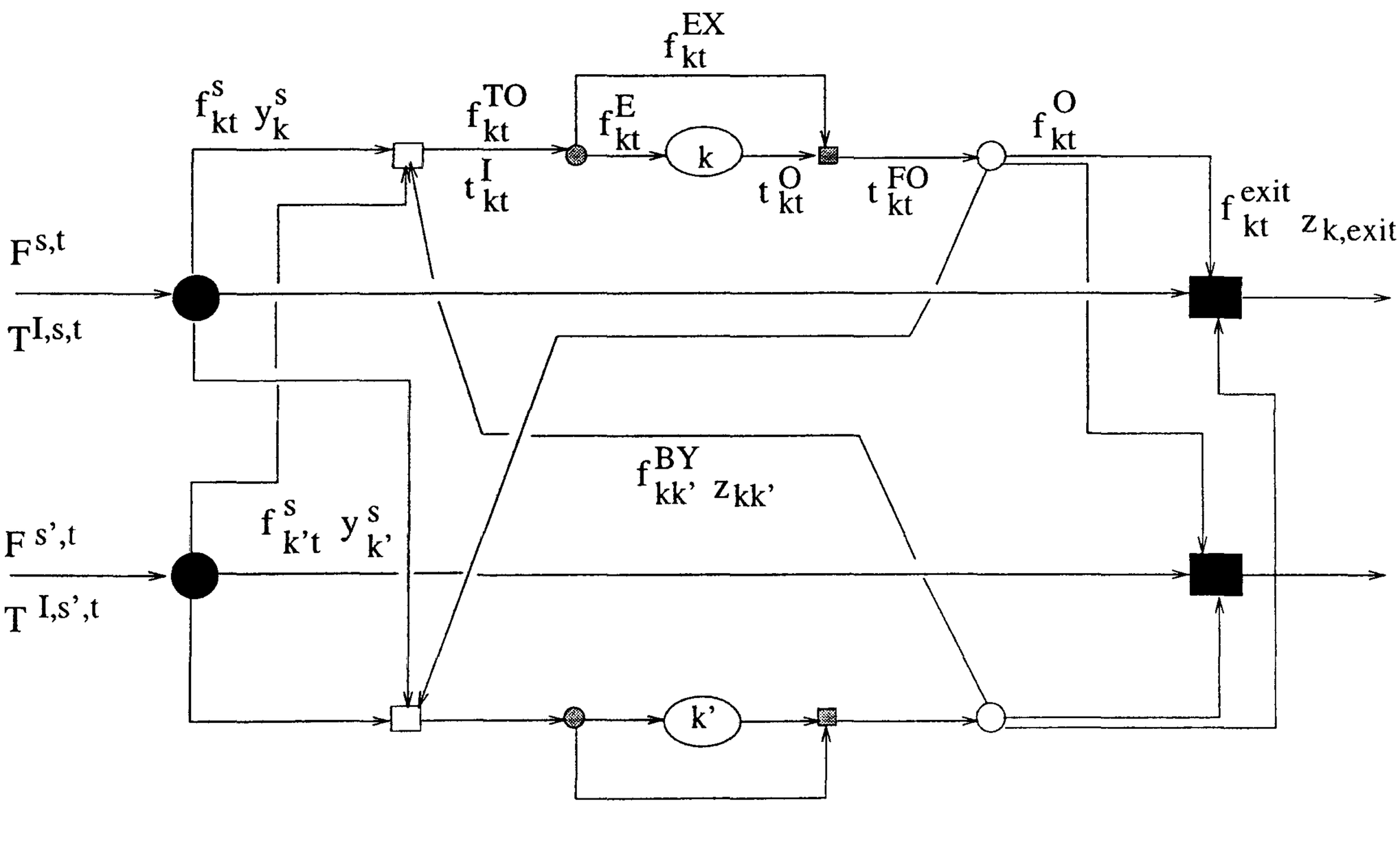

Figure 2.6: Multiperiod hyperstructure (one-to-many exchanger assignment)

Both network representation embed all possible network configurations and result in MINLP models. The second representation provides the possibility of mixing different streams. In Chapter 6 it is shown how one can incorporate different stream mixing within mass/heat exchange hyperstructure for heat integration. When one-to-one assignment of units to tasks is considered, constraints on heat loads and stream matches and flows are more easily incorporated. In the next section the synthesis/retrofit model for multiperiod operation is described for both one-to-one and one-to-many unit-to-task assignment. The detailed models are given in Appendix B.

2.5 Synthesis/Retrofit Model for Multiperiod Operation

Multiperiod operation in the heat exchanger network hyperstructure is realized denoting each stream flow, temperature and heat load explicitly, over the considered periods of operation. At each period the temperature range is partitioned into $\mathbf{IT}^t$ temperature intervals using the inlet temperatures of each process stream. The temperature difference for this partitioning is considered equal to zero (Temperature Interval Approach Temperature, TIAT=0). The role of this partitioning is to identify the possibility of multiple heat exchange between streams in order to postulate them in the multiperiod hyperstructure and not to determine utility consumption. The actual utility consumption will be determined by the minimization of total cost, simultaneously with the necessary process stream matches and optimal network configuration. If a fixed HRAT (Heat Recovery Approach Temperature, used to quantify utility consumption levels) is to be used, the temperature interval partitioning is based on this HRAT.

One-to-one unit-to-match assignment

The existence of each stream match/exchanger is denoted by a binary variable y_{ijs} (where i is the hot stream, j the cold stream and s the multiplicity of heat exchange between i and j). s may correspond to a potential subnetwork. In general, we define a set $\mathbf{IS}^{\mathbf{t}}$ of potential "subnetworks" at each period of operation. However, the concept of subnetworks here is not strict as in pinch technology and the term is used to denote the possibility of multiple heat exchange between two process streams, so that the multiperiod hyperstructure can then include all the network configuration alternatives. Multiple heat exchange is determined by optimization of total cost and is dependent partly on ΔT_{min}. When a fixed HRAT is used, then "subnetworks" have the classical meaning as used by Floudas *et al.* (1986).

In order to exploit structural properties, piping layout may be explicitly modelled through binary variables, *i.e.* the existence of each piping segment is denoted by a binary variable. This may result in a large number of binary variables. However, logical relations between structural variables can be posed as integer cuts, whereas, employing decomposition solution techniques, structural variables simplify the solution of intermediate subproblems. If stream re-matching in each period of operation is possible, *i.e.* when multiperiod operation can actually be realized and is not an artificial concept, *e.g.* in multipurpose plants, heat exchange match variables can be defined for each period of operation.

The synthesis/retrofit model then consists of:

- a heat flow model
- the multiperiod hyperstructure model
- match-exchanger assignments
- an objective function

The heat flow model can be represented by the multiperiod transshipment model proposed by Floudas and Grossmann (1986). When HRAT is not fixed, the heat flow model can be excluded, since only acts as a set of bounding constraints.

The multiperiod hyperstructure model mainly involves (see Appendix B):

(i) Mass balances for each stream, at splitters and mixers, over each period of operation.

(ii) Energy balances at the mixers of the hyperstructure prior to heat exchangers for each process stream.

(iii) Energy balances over the exchangers for the hot and the cold stream, where the heat load of each stream match is defined.

(iv) Feasibility constraints at the inlet and outlet of each heat exchanger, ensuring the existence of a minimum driving force, in terms of temperature approach, for heat transfer in each period of operation.

(v) Rating equations for heat exchangers, where exchanger areas are determined. Exchanger design equations give a lower bound to exchanger areas, which tend to be minimized through the minimization of the total network cost, so as area sufficiency is guaranteed in each period of operation, *e.g.* for match (ijs) (i- hot stream, j- cold stream, s- multiplicity of heat exchange):

$$A_{ijs} \geq \frac{Q_{ijst}}{U_{ijst} LMTD_{ijst}} \quad \forall t, \text{ t period of operation}$$

where A is the heat exchanger area, Q_{ijst} the heat load in period t, U_{ijt} the heat transfer coefficient and $LMTD_{ijst}$ the logarithmic mean temperature difference in each period.

(vi) Energy balances at the mixers of the hyperstructure for each process stream in each operating period.

(vii) Mixed integer constraints that determine the existence of stream matches and flows and give an upper bound to corresponding continuous variables, *e.g.*

the existence of a stream match (ijs) is determined by

$$Q_{ijst} - y_{ijs}\mathbf{Q^U} \leq 0 \quad \forall t, \text{ t period of operation}$$

where $\mathbf{Q^U}$ is an upper bound on the match heat load.

The existence of the piping segment from the initial splitter of stream k to exchanger $(kk's)$, denoted by $w^k_{k's}$, is determined by

$$f^{I,k}_{k'st} - w^k_{k's}\mathbf{F^U} \leq 0 \quad \forall t, \text{ t period of operation}$$

where $\mathbf{F^U}$ is an upper bound to stream flows.

If exchanger $(kk's)$ does not exist, no such piping segment can exist:

$$w^k_{k's} - y_{kk's} \leq 0$$

Integer constraints like the above are also included in the model (see Appendix B).

Match-exchanger assignments are necessary in the retrofit case, where the existing exchangers are fully exploited and may be assigned to old or new stream matches or re-assigned in each period of operation, if possible. Exchanger area may be added to each existing exchanger or the area of an exchanger may be assigned to the location of another existing exchanger. Denoting by d^n_{ijs} the assignment of exchanger n to match (ijs) and by n_{ijs} the purchase of a new exchanger for the match, we will have (see Appendix B):

$$\sum_n d^n_{ijs} + n_{ijs} - y_{ijs} = 0$$

Also if v_{nl} denotes the assignment of the area of exchanger l to the location of exchanger n, EA_n is the existing area of exchanger n and AEA_n the existing area assigned to the location of exchanger n:

$$AEA_n = \sum_l v_{ln} EA_l$$

$$\sum_n v_{ln} \leq 1$$

$$\sum_{(ijs)} d^n_{ijs} + \sum_{l \neq n} v_{ln} \leq 1$$

ensuring that an exchanger will be either allocated to a stream match or to another existing exchanger.

Synthesis of flexible heat exchanger networks is driven by the minimization of a total cost comprising:

- the operating cost of hot and cold utility consumption
- the capital investment cost of heat exchangers, including area cost and installation cost
- the capital investment cost for piping

The synthesis objective function is described in detail in Appendix B.

Retrofit of heat exchanger networks, is driven by the minimization of a total annualized retrofit cost. Existing equipment must be utilized and structural modifications are penalized. Retrofit cost comprises (see Appendix B):

- operating cost
- cost of purchasing a new exchanger
- cost of reassigning an existing exchanger to a different match
- cost of assigning the area of an existing exchanger to the location of another existing exchanger
- repiping cost.

It should be noted that restrictions on the network structure, (*e.g.* no stream splitting requirement) and/or undesired (forbidden) matches (due to layout restrictions) can be easily introduced in the model.

One-to-many unit-to-match assignment

The synthesis/retrofit model when one-to-many unit-to-match assignment is considered, involves also:

- a heat flow model, which may be omitted if HRAT is not fixed.
- the multiperiod hyperstructure model including (i) mass and energy balances for each period of operation), where mixers and splitters prior and after each exchanger are assigned to the exchanger rather than the stream, (ii) feasibility constraints, (iii) exchanger design equations and (iv) overall energy balances for each process stream and each period of operation.
- exchanger assignment constraints.
- an objective function, similar to the one-to-one assignment case.

The synthesis/retrofit model is also described in detail in Appendix B.

2.6 Solution Procedure

The synthesis/retrofit model for multiperiod operation is formulated as a mixed integer nonlinear programming model. Generalized Benders decomposition is employed for its solution (Geoffrion, 1972; Paules IV and Floudas, 1989). The basic idea is the partition of the variable set into two

subsets. The first set consists of the binary variables, whereas all the continuous variables are included in the second set. The MINLP model is then decomposed into two subproblems, a Primal NLP and a Master subproblem which is a MILP formulation. The Primal NLP involves pure continuous and mixed integer constraints, where binary variables are fixed to produce a certain network structure. The optimization of the NLP-Primal results in an upper bound to the overall solution. Due to the presence of nonconvex terms, global solution cannot be guaranteed, unless a global optimization algorithm is employed (Floudas and Visweswaran, 1990; Floudas and Visweswaran, 1993). The Master MILP involves pure integer constraints and the Lagrangian function of each Primal NLP. Its solution gives a lower bound to the overall problem solution, which is obtained by iterating between the two subproblems.

In the following section example problems are presented to illustrate the applicability of the synthesis/retrofit framework for flexibility.

2.7 Examples

Example 2.1

Consider the network of the small motivating example (Figure 2.1). The retrofit model for flexibility is developed. Two periods of operation are considered, the nominal and the operating condition of greater violation of the network feasibility constraints:

$$F_{H1}^{N} = 3\ KW/^{o}C \qquad F_{H2}^{N} = 4\ KW/^{o}C$$

$$F_{H1}^{cr} = 4\ KW/^{o}C \qquad F_{H2}^{cr} = 5\ KW/^{o}C$$

Cost data are given in Table 2.3.

The MINLP retrofit model involves 392 rows, 241 continuous variables and 58 binary variables. The model is solved via Generalized Benders Decomposition, as applied through the modelling system GAMS (Brooke *et al.*, 1988). The solution was obtained in 30 GBD iterations. The retrofitted network is illustrated in Figure 2.7. It features increased exchanger areas

$$A_1' = 72.61\ m^2 \qquad A_2' = 107\ m^2$$

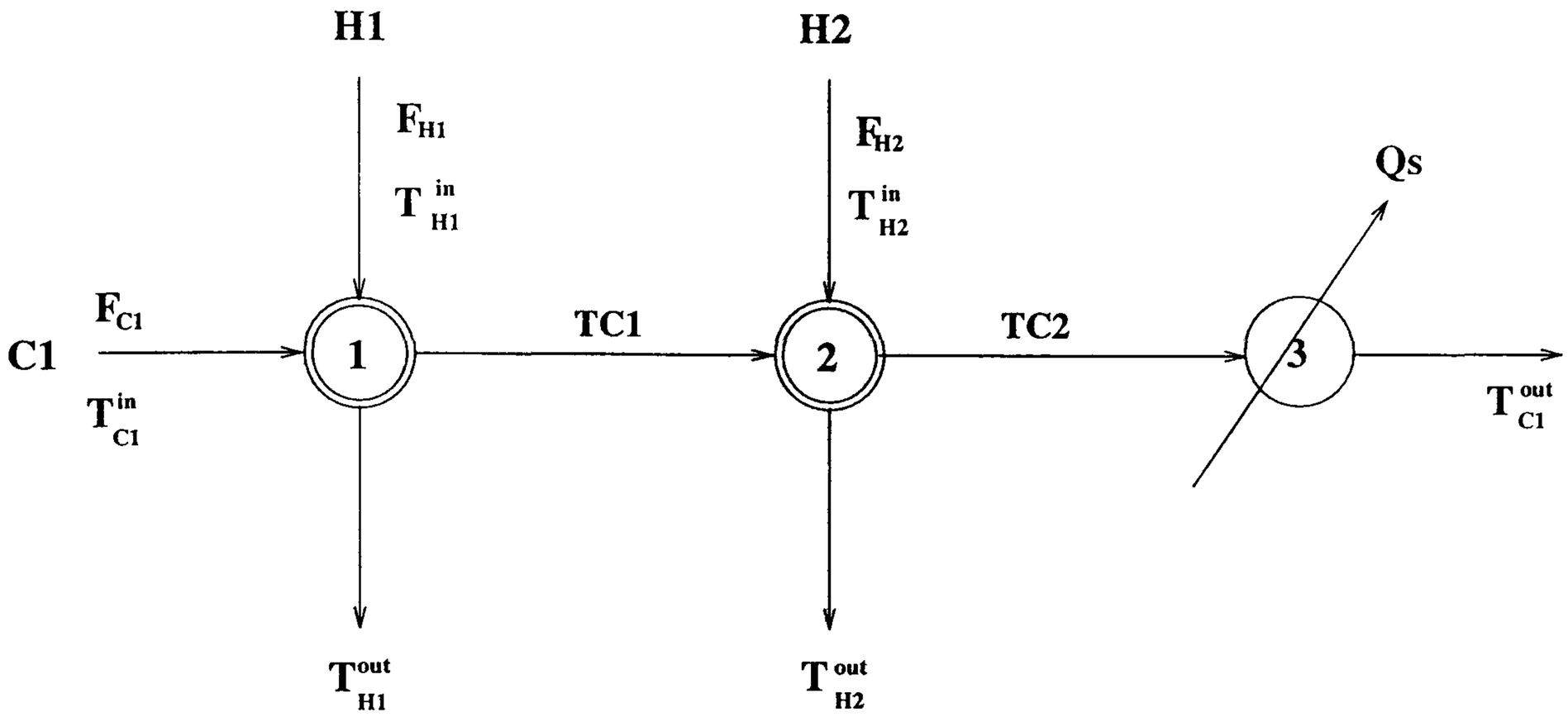

Figure 2.7: Retrofitted HEN in Example 2.1

	Cost
Steam	11.05 $\$/kWyr$
Repiping	10000 $\$/yr$
Exchanger reassignment	10000 $\$/yr$
Area cost	1200 $A^{0.6}$ $\$/yr$

Table 2.3: Cost data for motivating example.

and a total annualized retrofit cost of \$ 25093/yr, with an average utility consumption of 473.5 kW (621 kW for nominal operation). Note that the minimum utility consumption for nominal operation is also 621 kW.

When reassignment of exchangers is not penalized, the multiperiod retrofit model results in the network of Figure 2.8, where exchanger 1 is assigned to stream match $H2-C1$ and exchanger 2 to $H1-C1$. The heat exchanger areas are:

$$A'_1 = 72.34\ m^2 \qquad A'_2 = 107\ m^2$$

and the network features a total annualized retrofit cost of \$ 24126/yr.

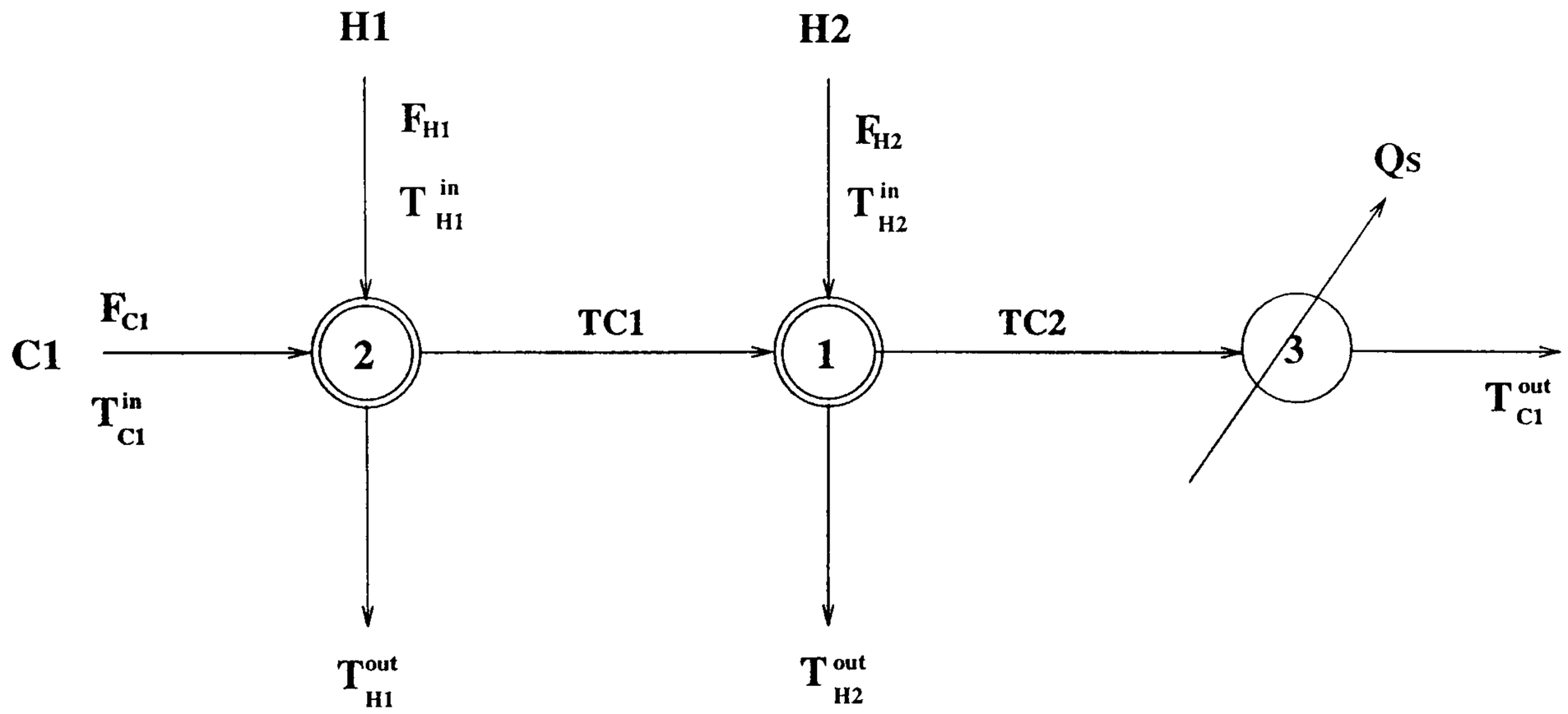

Figure 2.8: Retrofitted HEN with no reassignment cost in Example 2.1

Example 2.2

The heat exchanger network of Figure 2.9 (Saboo and Morari, 1984), involving two hot and two cold process streams is considered. Stream data for the nominal operating condition are given in Table 2.4. Cooling water is available as cooling utility. A $\Delta T_{min} = 0°C$ is specified. The heat capacity flowrate of stream H1 varies within the range:

$$1\ kW/K \ \leq \ F_{H1} \ \leq \ 2kW/K$$

For simplification reasons, heat exchanger areas are not taken into consideration.

The flexibility analysis of the network with respect to feasible heat exchange constraints only, yields an $FI = 0.1181$ and a critical heat capacity flowrate of H1, $F^c_{H1} = 1.181\ kW/K$ is identified (non-vertex critical parameter point, see also Grossmann and Floudas (1987)).

The multiperiod retrofit model is then developed, based on the nominal operating condition and the one defined by F^c_{H1}. Both the proposed hyperstructure network representations are alternatively employed. Cost data for the retrofit are given in Table 2.5.

When one-to-one assignment of exchangers to stream matches is considered, the MINLP retrofit model results in the network illustrated in Figure 2.10. this structure features an average utility consumption of 33.53 kW (22 kW for nominal operation, which corresponds to minimum

BIBL. LONDIN. UNIV.

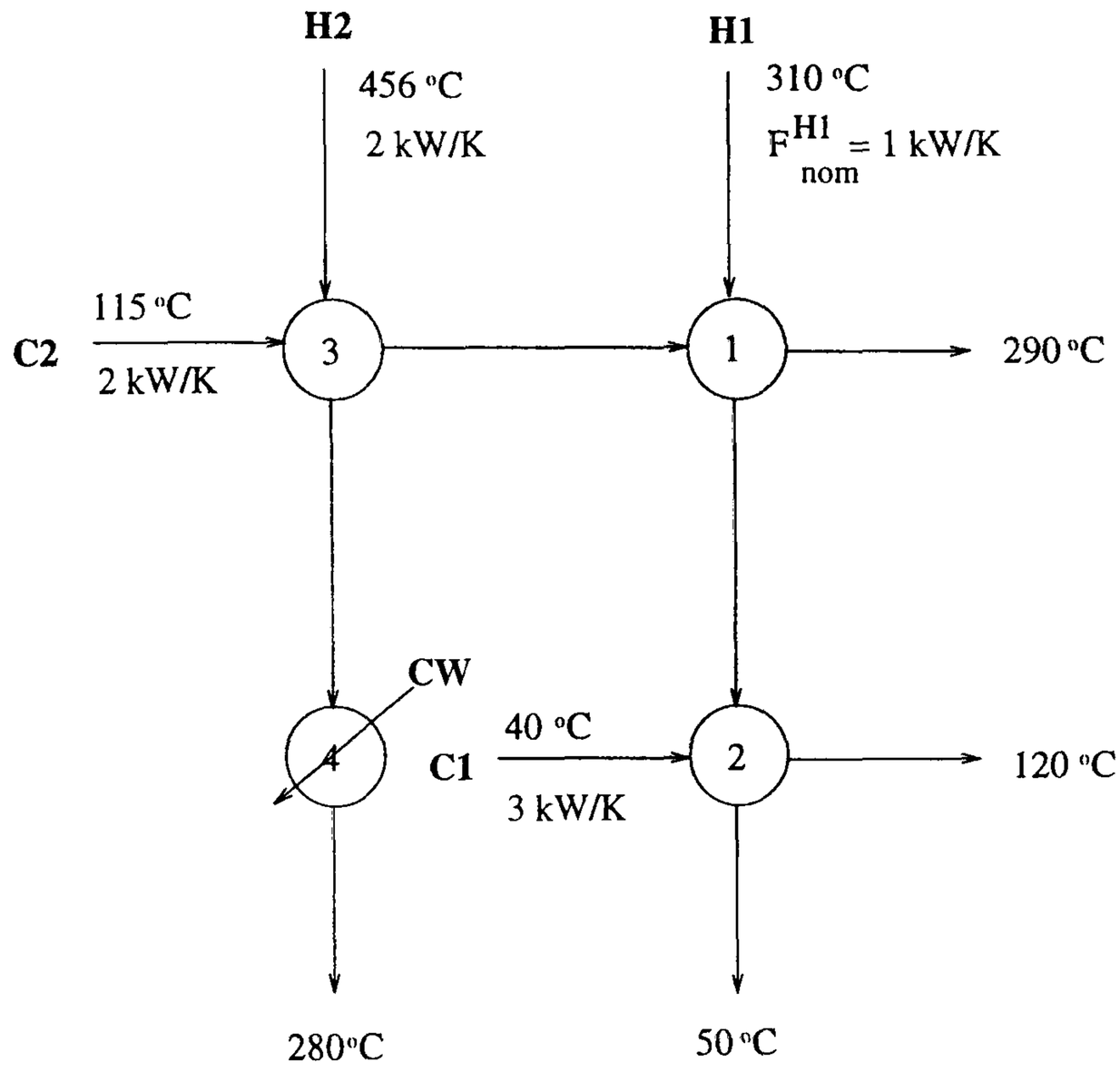

Figure 2.9: Existing Network for Example 2.2

Stream No.	T_N^{in} (^oC)	T^{out} (^oC)	FCP^N (KW/K)
H1	310	50	1
H2	450	280	2
C1	40	120	3
C2	115	290	2
CW	15	25	

Table 2.4: Stream data for Example 2.2

	Cost
Steam	11.05 $\$/kWyr$
Cost of making a new match	10 $\$/yr$
Repiping	$10000(\frac{f^{pipe}_{flow}}{FCP})$ $\$/yr$
Exchanger reassignment	50 $\$/yr$

Table 2.5: Cost data for Example 2.2

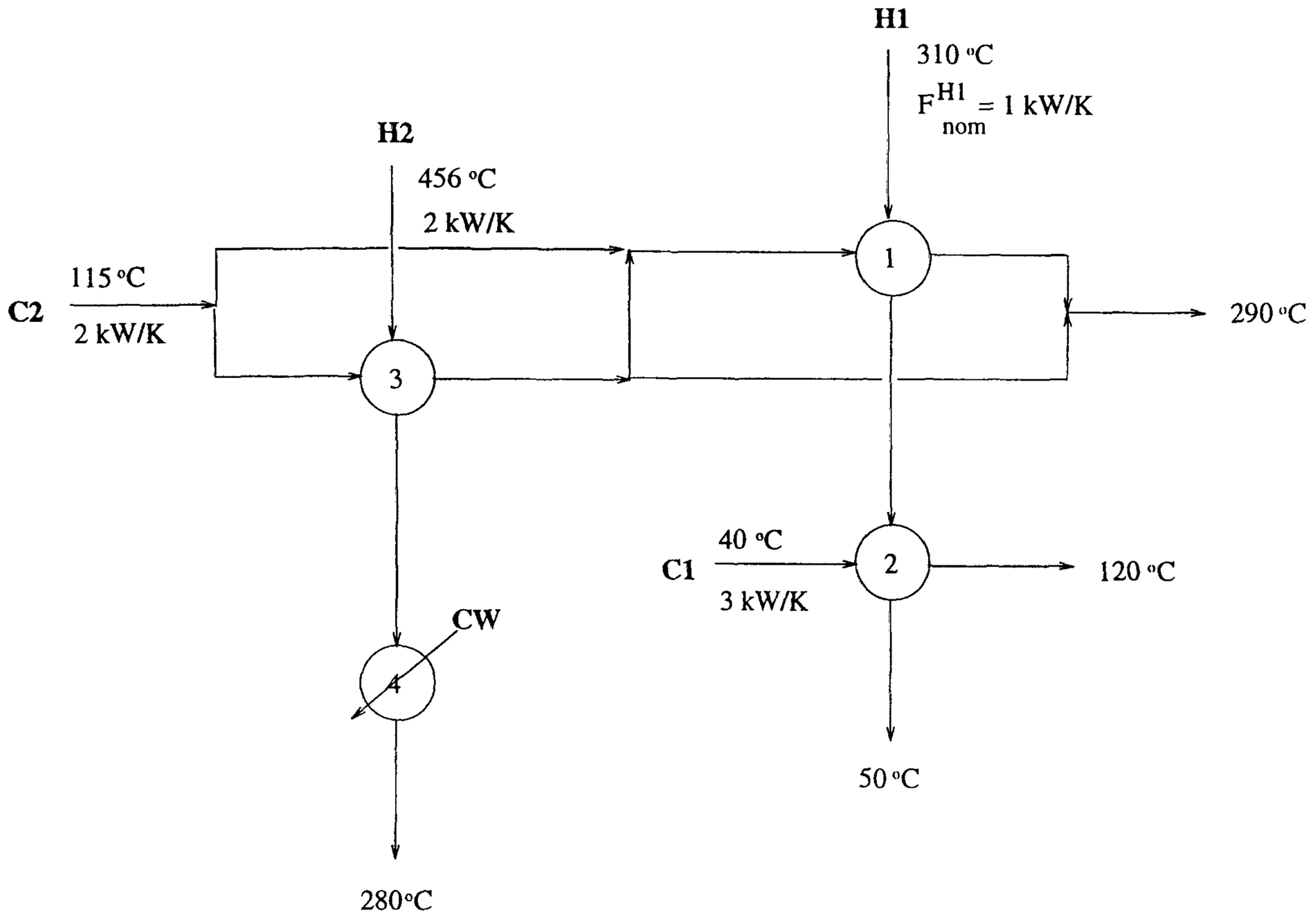

Figure 2.10: Retrofitted Network for Example 2.2

utility consumption) and a total annualized retrofit cost of \$ 1358/yr. The MINLP problem, involving 439 rows, 386 continuous variables and 99 discrete variables, was solved via generalized Benders decomposition through GAMS, in 2 GBD iterations (consuming approximately 10 CPU sec on a SPARC-2 workstation computer). The proposed network is fully flexible in the whole range of uncertainty of F_{H1} ($F^t = 1$).

An alternative network, illustrated in Figure 2.11, can also be obtained (starting from a different initial point). This alternative retrofit structure, which has been proposed as optimal by Calandranis and Stephanopoulos (1986), is also flexible, but according to the cost data of Table 2.5, corresponds to a total retrofit cost of \$ 10328/yr. Although it has the same utility consumption, the reassignment of the cooler to H1 (instead of H2) is proven less economical. This suggests that the final retrofitted network configuration and/or the extent of the structural modifications will be determined by the exact and realistic formulation of the objective function.

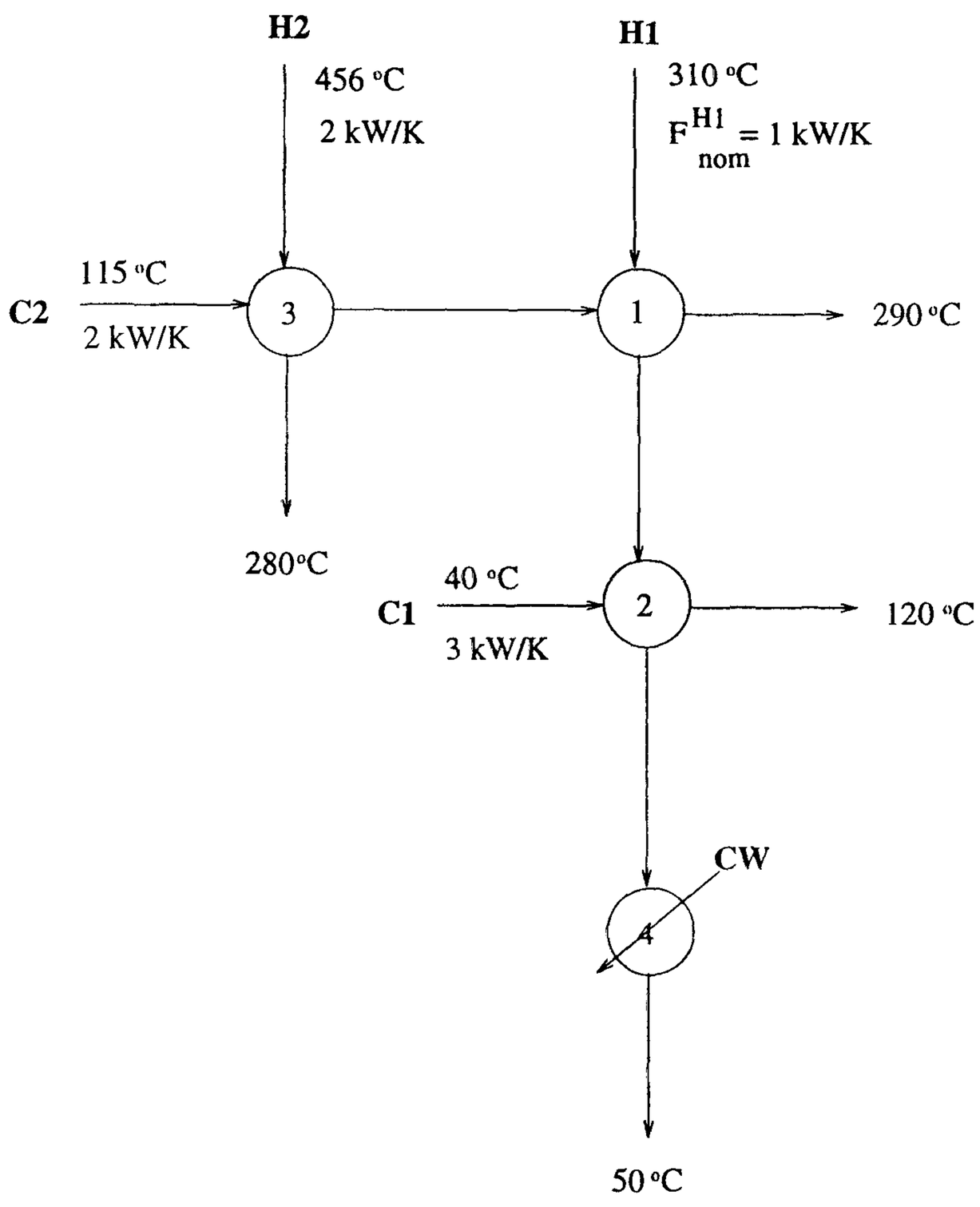

Figure 2.11: Alternative Network for Example 2.2

When one-to-many stream match-exchanger assignment is considered, a retrofitted network structure is obtained, which is identical to the one of Figure 2.10. Six iterations were required for the applied Generalized Benders decomposition consuming approximately 70 s (SPARC 2 workstation). The MINLP featured 1524 rows, 666 continuous variables and 354 discrete, while the first NLP primal subproblem 501 rows and 413 variables and the first MILP master 248 rows, 309 continuous variables and 128 discrete.

Example 2.3

The application of the proposed retrofit strategy in the case of fouling of heat exchanger will be illustrated with the HEN shown in Figure 2.12, which involves two hot and two cold streams (Kotjabasakis and Linnhoff, 1987). Stream data are given in Table 2.6, whereas heat exchanger data are given in Table 2.7. The heat transfer coefficient between H1-C1 (heat exchanger 1) varies as shown below:

$$0.081 kW/m^2K \leq U_{H1C1} \leq 0.120 kW/m^2K$$

The existing HEN cannot satisfy stream temperature requirements as U_{H1C1} decreases from its nominal value of 0.120 kW/m^2K.

The multiperiod retrofit model, based on the one-to-one assignment of exchanger to stream matches, is developed for two periods of operation, defined by the extreme values of U_{H1C1}. Operating and capital cost data are given in Table 2.8. A $\Delta T_{min} = 5°C$ is specified. A high piping cost of \$ 10000 yr^{-1} is also considered so as to account for pressure drop considerations and to avoid extensive stream splitting.

The MINLP retrofit model (involving 678 rows, 434 continuous and 117 binary variables) was solved and the retrofitted structure is illustrated in Figure 2.13. The network features an area increase in exchanger 3 (which is not the fouling exchanger) of 107 m^2, an average utility consumption of 1850 kW (minimum utility consumption) and a total annualized retrofit cost of \$ 26250 yr^{-1}. The proposed network can feasibly operate in the whole uncertainty range of U_{H1C1}.

An alternative structure, with an associated cost of \$ 27610 yr^{-1}, shown in Figure 2.14, is obtained starting the retrofit model from a different set of initial values. In this case, the area of the fouling exchanger is increased by 153 m^2.

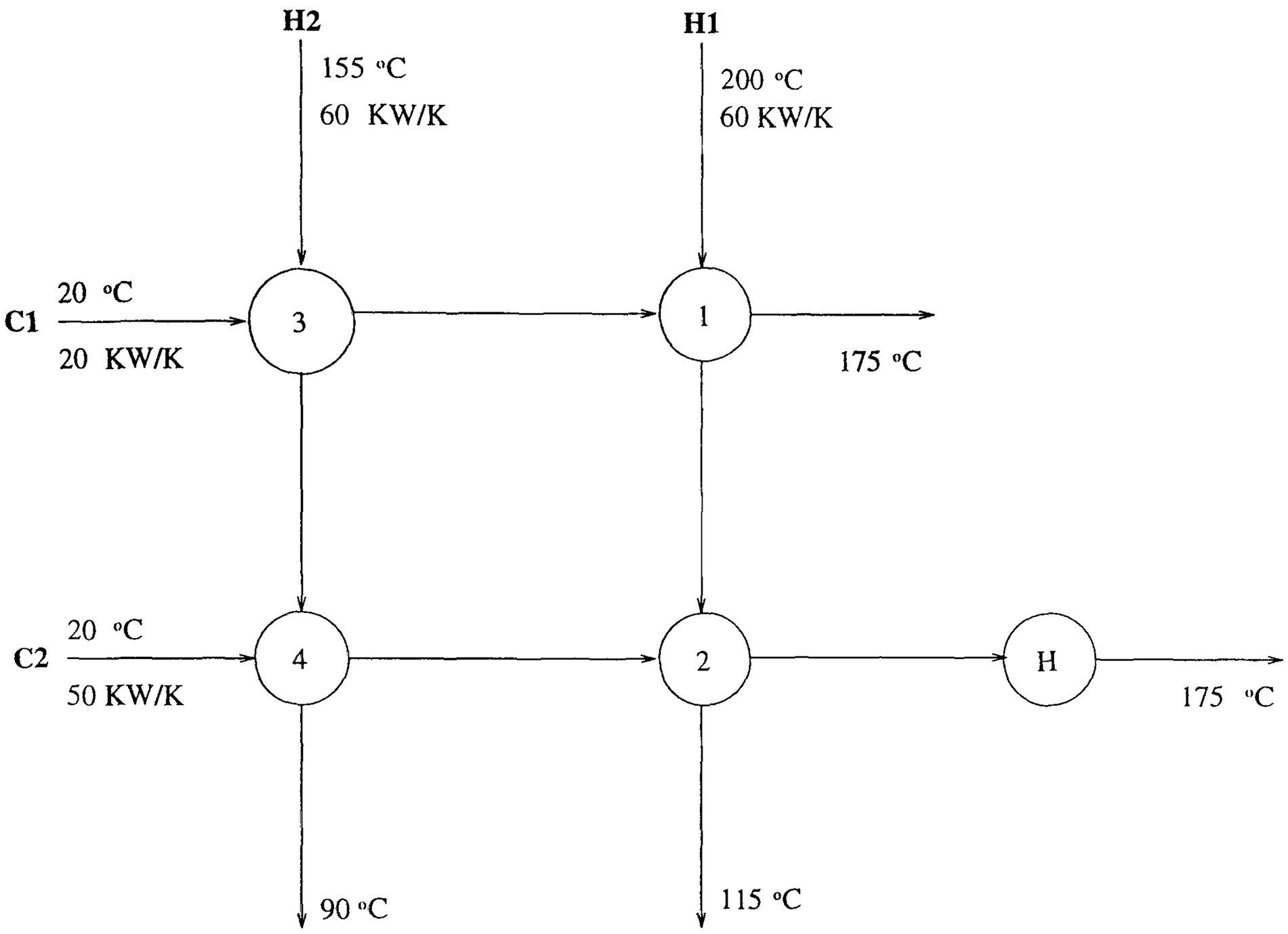

$$0.081 \ \text{KW/m}^2\text{K} \ \leq \ U1 \ \leq \ 0.12 \ \text{KW/m}^2\text{K}$$

Figure 2.12: Existing Network for Example 2.3

Stream No.	T^{in} (^oC)	T^{out} (^oC)	FCP (KW/K)
H1	200	115	60
H2	155	90	60
C1	20	175	20
C2	20	175	50
STEAM	300	300	

Table 2.6: Stream data for Example 2.3

Exchanger No.	Area (m^2)	U (KW/m^2K)
1	305	0.12-0.081
2	600	0.15
3	63	0.225
4	173	0.36

Table 2.7: Exchanger areas for Example 2.3

	Cost
Steam cost	11.05 $\$KW^{-1}yr^{-1}$
Additional area cost	$350AA^{0.6}$ $\$yr^{-1}$

Table 2.8: Retrofit cost data for Example 2.3

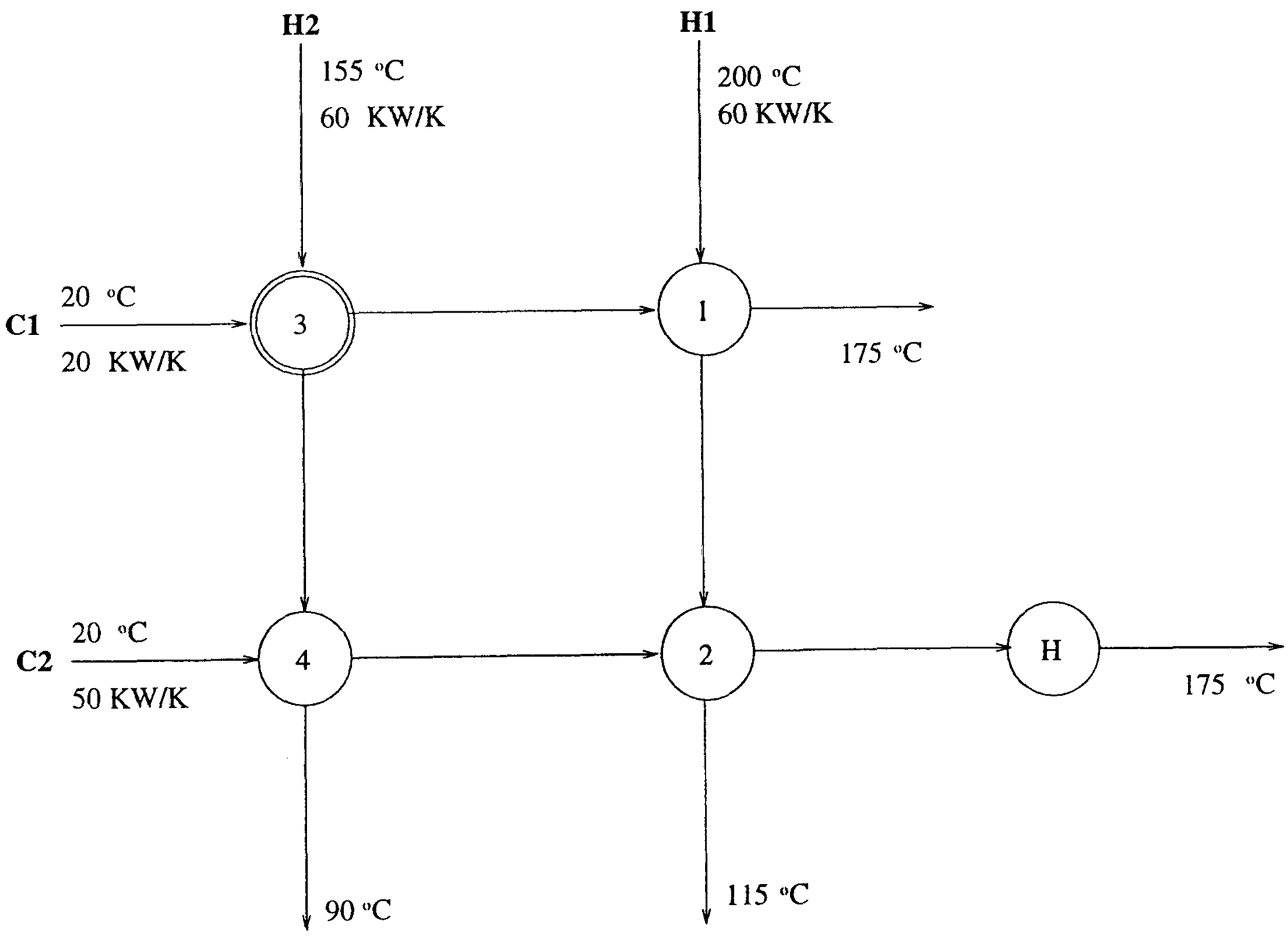

Figure 2.13: Retrofitted Network for Example 2.3

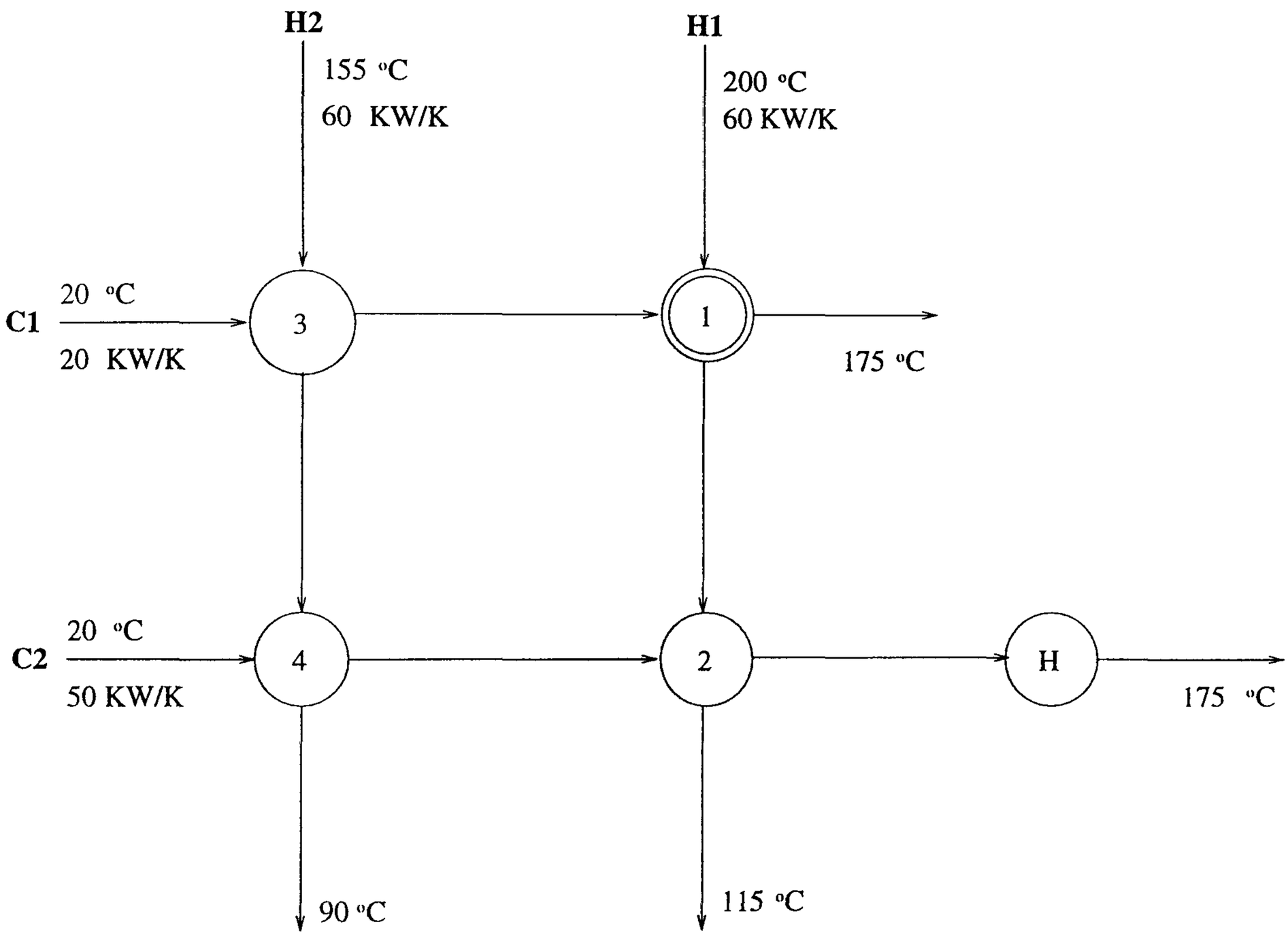

Figure 2.14: Alternative Network for Example 2.3

Example 2.4

The example problem 10SP1 (Pho and Lapidus, 1973) is presented to illustrate the performance of the proposed multiperiod MINLP synthesis/retrofit model in large scale problems. It involves a system of five hot and five cold streams, with heating utility provided by stream at 456^oF and cooling water $100^oF - 180^oF$ as cooling utility. Stream data and utility cost data are given in Table 2.9. The network of Figure 2.15 (existing) is obtained by simultaneous optimization of process stream matches and network configuration (Floudas and Ciric, 1988). The heat exchanger areas are considered 20% overdesigned (see Table 2.10). ($\Delta T_{min} = 20^oF$ and $U = 0.15\ kBtu/hr\ ft^2\ ^oF$ are also specified).

Uncertainty is introduced to the inlet temperature of cold stream C5 ($\pm 10^oF$ variations) and the heat capacity flowrate of hot stream H4 ($\pm 2\ kBtu/hr\ ^oF$). A flexibility analysis reveals that the existing network is able to operate in only 56% of the uncertainty region defined by F_{H4} and T^{in}_{C2}, due to ΔT_{min} - constraints in exchanger 2.

The multiperiod retrofit model is developed for the part of the network that limits flexibility (exchangers 1, 2, 5-10). Retrofit cost data are given in Table 2.11. Five periods of operation are considered, defined by the nominal operating point and the vertices of the uncertainty region. The model involves 5578 rows, 3177 continuous variables and 642 binary variables. The retrofitted network is illustrated in Figure 2.16. It was obtained in 5 GBD iterations (consuming approximately 1424 CPU seconds on a SPARC10 workstation computer). It features a total annualized retrofit cost of \$ 29944 yr^{-1}, the same exchanger areas as the existing network and a bypass on the cold side of exchanger 6. The average utility consumption is 6413.5 kW. Note that for nominal operation 6355 kW are required, relaxing the outlet stream temperatures, while 6495 kW is the minimum utility consumption for fixed outlet stream temperatures. An alternative network, shown in Figure 2.17, associated with a total annualized retrofit cost of \$ 41840 yr^{-1}, is obtained in an intermediate GBD iteration. This network structure differs from the existing one in only that C2 is split initially towards both its exchangers and exchanger 1 has an increased are (by 8.9 m^2), while the large cost difference is due to the high penalty for repiping.

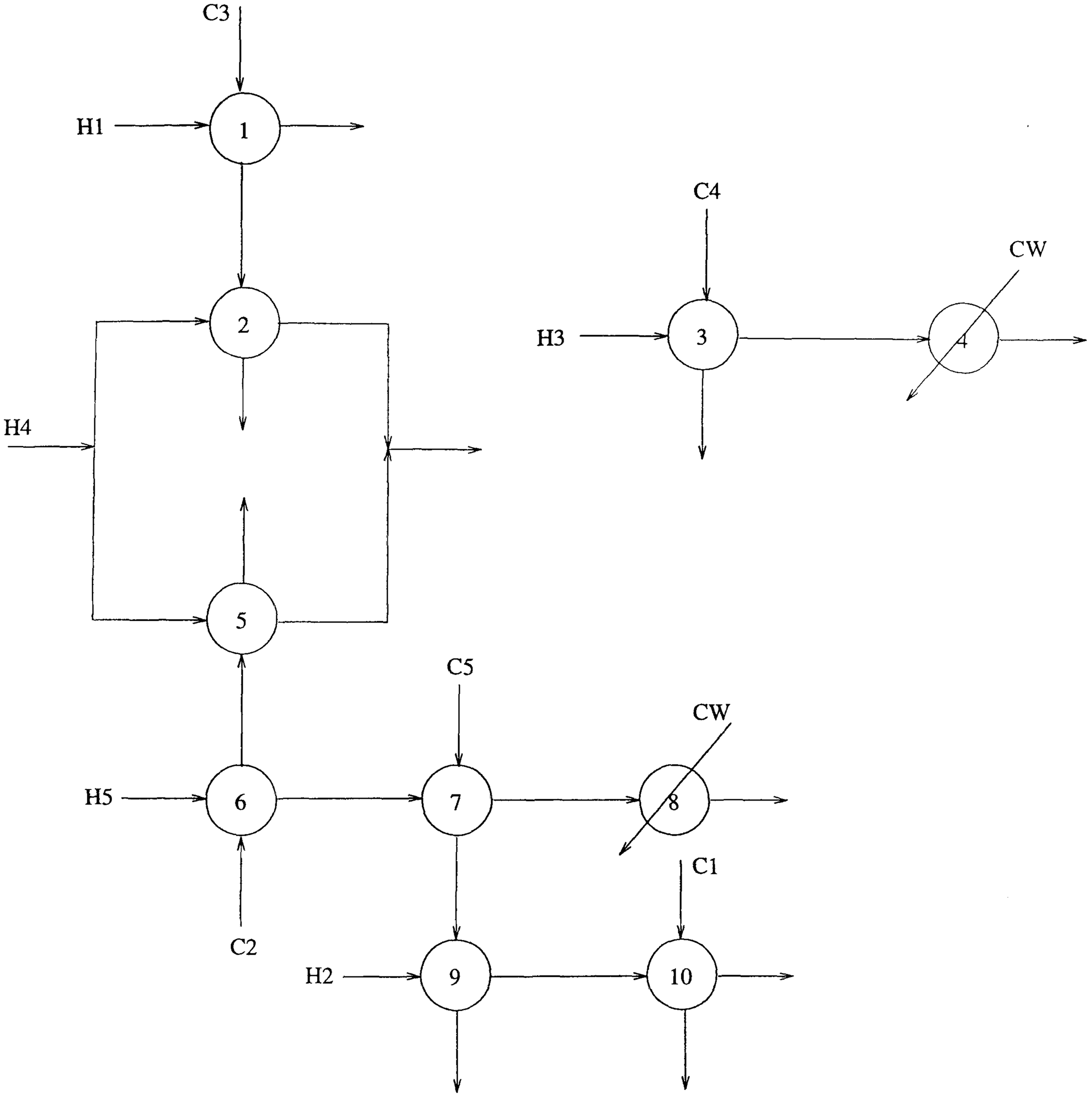

Figure 2.15: Existing Network for Example 2.4

Stream No.	T^{in} (^oF)	T^{out} (^oF)	FCP^N ($kBtu/hr^oF$)	Cost ($\$kBtu^{(-1)}hryr^{(-1)}$
H1	320	$\leq$ 200	16.67	
H2	480	$\leq$ 280	20	
H3	440	$\leq$ 150	28	
H4	520	$\leq$ 300	23.8	
H5	390	$\leq$ 150	33.6	
C1	140	$\geq$ 140	14.45	
C2	240	$\geq$ 431	11.53	
C3	100	$\geq$ 430	16	
C4	180	$\geq$ 350	32.76	
C5	200	$\geq$ 400	26.35	
Steam	456	456		11.05
Water	100	$\leq$ 180		5.031

Table 2.9: Stream data for Example 2.4

Exchanger	1	2	3	4	5	6	7	8	9	10
Ex.Area (ft^2)	165	320	1415	369	260	15	620	472	157.2	185

Table 2.10: Exchanger areas for Example 2.4

	Cost
Additional area cost	$350AA^{0.6}$ $\$yr^{-1}$
Reassignment cost	500 $\$yr^{-1}$
Piping cost	10000 $\$yr^{-1}$

Table 2.11: Retrofit cost data for Example 2.4

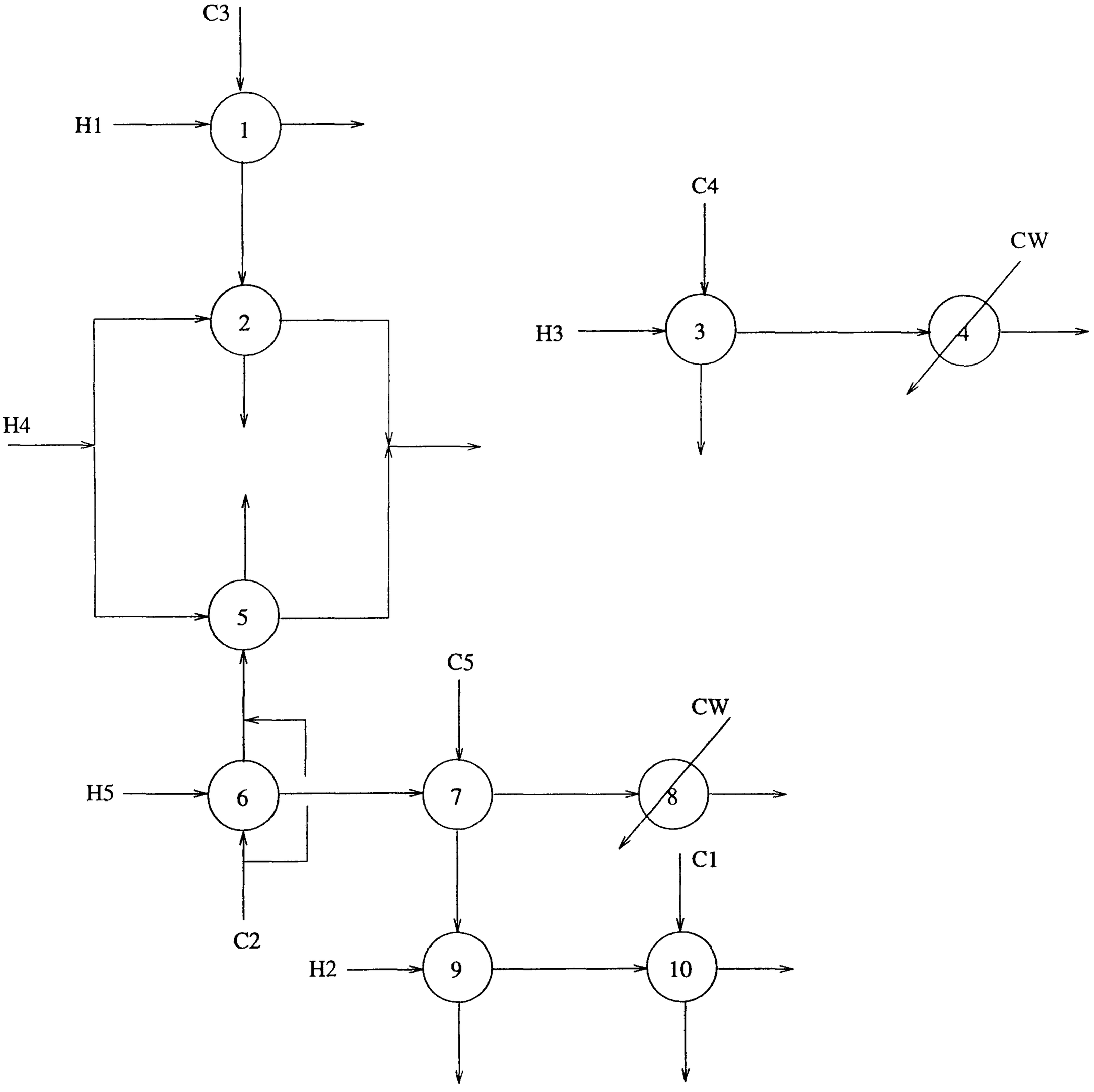

Figure 2.16: Retrofitted Network for Example 2.4

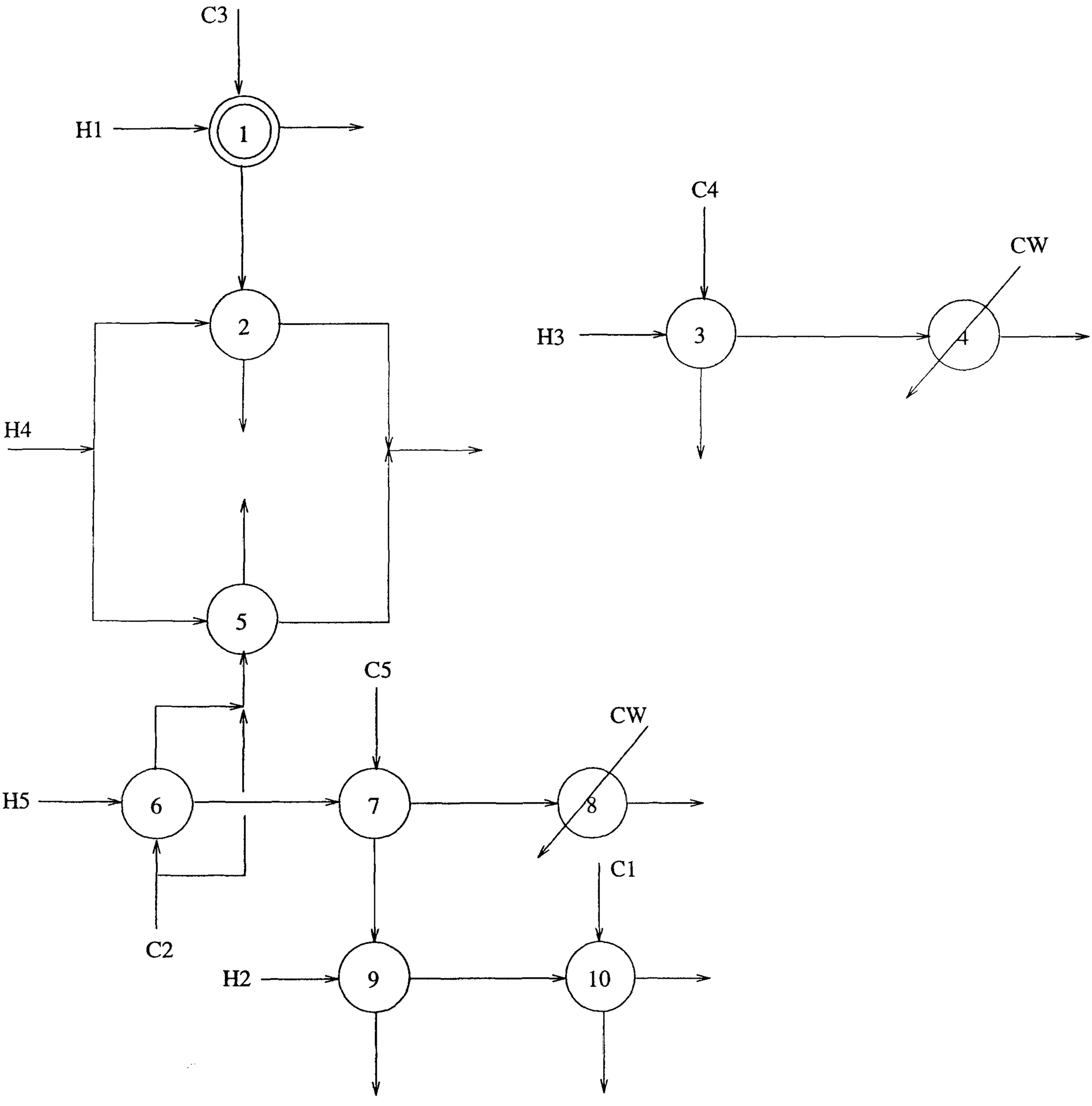

Figure 2.17: Alternative Network for Example 2.4

2.8 Explicit Flexibility Constraints in HEN Synthesis

The iterative framework of Figure 2.3 for the synthesis and retrofit design of flexible HEN implies that a large-scale problem must be solved many times in order to obtain a network that satisfies the flexibility target. Cost optimality of the final network depends on critical as well as nominal operating conditions and unless realistic weighting factors for operating periods are employed, average operating cost may not reflect actual operation. Thus, it is of scope that flexible operation of the network can be guaranteed in *one synthesis step*, where operating cost is based on nominal conditions and total synthesis cost reflects cost penalties for flexibility requirements.

The HEN synthesis (and/or retrofit design) problem for flexibility has been formulated as an optimization problem, involving an inner optimization problem:

$$\begin{aligned} &\min_{(\Delta)V_d,V_x,V_z} \quad \text{(total annualized cost (synthesis or retrofit))} \\ &s.t. \qquad \chi(V_d,U(V_\theta)) = \max_{V_\theta \in U(V_\theta)} \min_{V_z} \max_{j \in J_f} f_j(V_\theta,V_x,V_z,V_d) \leq 0 \\ &\qquad\qquad s.t. \qquad h(V_\theta,V_x,V_z,V_d) = 0 \end{aligned} \tag{PF}$$

Applying the Kuhn-Tucker optimality conditions (Bazaraa and Shetty, 1979) to the inner min-max problem in the χ-definition this can be formulated as follows (Grossmann and Floudas, 1987):

$$\chi(V_d,U(V_\theta)) = \max_{V_\theta,V_x,V_z,s_j,\lambda_j,\mu_j,Y_j} u$$

s.t.

$$\begin{aligned}
h_i(V_d,V_x,V_z,V_\theta) &= 0 \\
s_j + f_j(V_d,V_x,V_z,V_\theta) &= u \\
\textstyle\sum_j \lambda_j \frac{\partial f_j}{\partial x} + \sum_i \mu_i \frac{\partial h_i}{\partial x} &= 0, \quad x \in V_x \\
\textstyle\sum_j \lambda_j \frac{\partial f_j}{\partial z} + \sum_i \mu_i \frac{\partial h_i}{\partial z} &= 0, \quad z \in V_z \\
\textstyle\sum_j \lambda_j &= 1 \\
\lambda_j - Y_j &\leq 0 \\
s_j - \mathbf{U}(1-Y_j) &\leq 0 \\
\textstyle\sum_j Y_j &= |V_z| + 1 \\
V_\theta \in U(\theta) \qquad Y_j = 0,1 &\qquad s_j, \lambda_j \geq 0
\end{aligned}$$

In the above formulation the complementarity conditions are represented through the use of binary variables Y_j, which are equal to 1, if the corresponding constraint f_j is active in limiting flexibility (*i.e.* $f_j = u$). Assuming that h_i and f_j are linearly independent (Haar's condition, (Madsen and Schaer-Jacobsen, 1978)) there are $|V_z|+1$ active constraints that limit flexibility, where $|V_z|$ is the cardinality of V_z. Thus, the feasibility function can be decomposed and expressed in terms of candidate sets of active constraints, J_A^k ($k = 1, \ldots, N_J$ candidate sets of active constraints).

$$\chi^k(V_d, U(V_\theta)) = \max_{V_\theta \in U(V_\theta)} u^k(V_d, V_\theta^k)$$

where $u^k(V_d, V_\theta^k) = \max_{u, V_z^k, V_x^k} u$

s.t.

$$\begin{aligned} h_i(V_d, V_x^k, V_z^k, V_\theta^k) &= 0 \\ f_j(V_d, V_x^k, V_z^k, V_\theta^k) &= u, \quad j \in J_A^k \end{aligned}$$

and

$$\begin{aligned} \sum_{j \in J_A^k} \lambda_j^k &= 1 \\ \sum_{j \in J_A^k} \lambda_j^k \frac{\partial f_j^k}{\partial x} + \sum_i \mu_i^k \frac{\partial h_i^k}{\partial x} &= 0, \quad x \in V_x \\ \sum_{j \in J_A^k} \lambda_j^k \frac{\partial f_j^k}{\partial z} + \sum_i \mu_i^k \frac{\partial h_i^k}{\partial z} &= 0, \quad z \in V_z \\ |J_A^k| = |V_z| + 1 \quad &, \quad \lambda_j^k \geq 0 \end{aligned} \tag{I}$$

i.e. λ_j^k, μ_i^k can be fully determined by the above system of equations.

If f_j's are convex and h_i's affine with respect to V_x, V_z then from the Lagrangian of (I) at the optimal solution we will have :

$$\begin{aligned} u^k(V_d, V_\theta^k) &= L^k(u^\star, V_z^\star, V_x^\star, \lambda^\star, \mu^\star) \\ &= u^k + \sum_{j \in J_A^k} \lambda_j^k (f_j^k(V_d, V_x^k, V_z^k, V_\theta^k) - u^k) + \sum_i \mu_i^k h_i^k(V_d, V_x^k, V_z^k, V_\theta^k) \\ &= u^k(1 - \sum_{j \in J_A^k} \lambda_j^k) + \sum_{j \in J_A^k} \lambda_j^k f_j^k(V_d, V_x^k, V_z^k, V_\theta^k) + \sum_i \mu_i^k h_i^k(V_d, V_x^k, V_z^k, V_\theta^k) \\ &= \sum_{j \in J_A^k} \lambda_j^k f_j^k(V_d, V_x^k, V_z^k, V_\theta^k) + \sum_i \mu_i^k h_i^k(V_d, V_x^k, V_z^k, V_\theta^k) \end{aligned}$$

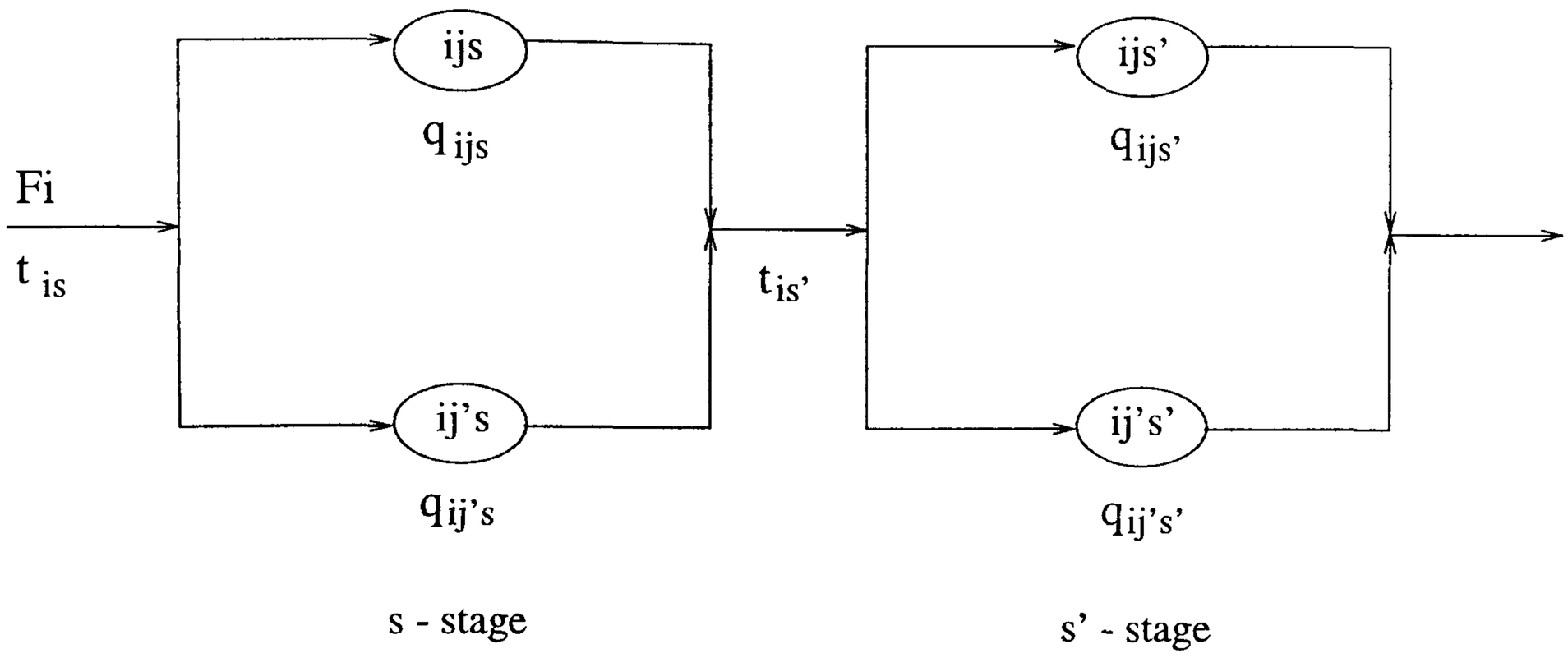

Figure 2.18: HEN stage-wise superstructure

Then, feasibility constraints become:

$$\chi^k(V_d, U(V_\theta)) = \sum_{j \in J_A^k} \lambda_j^k f_j^k(V_d, V_x^k, V_z^k, V_\theta^k) + \sum_i \mu_i^k h_i^k(V_d, V_x^k, V_z^k, V_\theta^k) \leq 0 \qquad k = 1, \ldots, N_J \quad (2.1)$$

where J_A^k is a set (the kth) of candidate active constraints. When the above function is monotonic with respect to V_θ and one can identify all the candidate sets of active constraints, (2.1) can be introduced explicitly in the HEN synthesis problem as *explicit flexibility constraints.*

The HEN hyperstructure, presented in section 2.4, is described by a set of equalities and inequality constraints with bilinear terms of different sign (see Appendix A), that do not satisfy the convexity assumptions of the above analysis. However, if heat integration alternatives are restricted to exchanger configurations in series and/or parallel exchangers with isothermal mixing, then the HEN synthesis problem can be formulated as a convex MINLP (employing Paterson's approximation for logarithmic mean temperature (Paterson, 1984; Floudas and Ciric, 1988)).

The HEN stage-wise superstructure assuming isothermal mixing, proposed by Yee and Grossmann (1990), is adopted here to represent heat integration alternatives. Multiple heat exchange is considered for each pair of streams, in different *superstructure stages.* Each stream is split at each stage towards its potential exchangers and no bypass streams are considered within each stage. Isothermal mixing implies that the exchanger outlet temperatures at each stage are the same for each stream (see Figure 2.18).

The existence of an exchange match is between i-hot stream, j-cold stream in s-stage, is represented by a binary variable y_{ijs} and the synthesis problem involves (i) energy balances for each stream and each stage, (ii) definition of inlet and outlet temperatures, (iii) interval feasibility constraints, (iv) mixed integer match definition constraints, (v) constraints to define the exchanger area and feasible heat exchange for each match, (vi) limits for variables (see Appendix C). The model is formulated as an MINLP. Energy stage balances and definitions of inlet, outlet stream temperatures correspond to equality constraints h_i's of (I), while interval feasibility constraints, design equations, temperature difference feasibility constraints and variable limits, correspond to f_j's; state and control variables in the HEN synthesis problem are stream stage temperatures, temperature differences and heat exchanger loads. Decomposition algorithms for the solution of the MINLP HEN synthesis model can be exploited to introduce explicit flexibility constraints for each HEN structure.

The Kuhn-Tucker conditions in the feasibility problem, (I), involve derivatives of constant sign, for uncertain stream flowrates, inlet temperatures and heat transfer coefficients. Treating the equalities h_i's as pairs of inequality constraints, candidate active constraint sets can be identified for each network structure within the HEN stage-wise superstructure, based on derivative information; *i.e.* a set of active constraints must involve such constraints, where a state/control variable appears with different sign (since multipliers of inequality constraints can only be positive in (I)). This requirement may be formulated as a MILP problem (Pistikopoulos and Grossmann, 1988), which when solved iteratively until integer infeasibility, gives <u>all</u> the possible sets of active constraints. Sets involving constraints that cannot be active *within the considered uncertainty* space are also identified.

The following must be taken into into account in identifying candidate active sets for each network structure, *i.e.* each vector of binary variables y_{ijs}:

1. A constraint can only be active if the corresponding binary variable activates it, *e.g.* an exchanger area constraint can only be active ($Y_{ijs} = 1$) if the corresponding exchanger exists:

$$Y_{ijs} - y_{ijs} \leq 0$$

2. Non-existing matches give constraints of the type $q_{ijs} \leq 0$. These constraints, along with the variable limit $-q_{ijs} \leq 0$ define equality constraints, that participate in determining $|V_z|$ and the number of active constraints per active set.

3. When an interval feasibility constraint becomes active, *i.e.* (see Appendix C)

$$th_{i,s+1} - th_{i,s} = 0$$

this implies that all heat exchange loads of the stream in the corresponding superstructure stage become zero, *i.e.* q_{ijs}'s limits become also active.

Furthermore, active interval feasibility constraints and energy stage balances are linearly dependent; thus, interval feasibility constraints are not counted in $|V_z| + 1$ (satisfying Haar's condition).

4. When two streams exchange heat in successive superstructure stages, temperature approach constraints at the first outlet, are identical to temperature approach constraints at the second inlet. Thus, such constraints can only become active together.

The above remarks can be explicitly introduced as integer constraints in the MILP formulation, for identifying candidate active sets, for each combination of exchange matches.

The solution of the MINLP HEN synthesis problem through Generalized Bender Decomposition can be altered to include χ-feasibility constraints as described in Figure 2.19 (see for details in Appendix C).

It must be noted that the algorithm of Figure 2.19 is only valid in the case of uncertain stream inlet temperatures. Otherwise, the χ-feasibility constraints only provide an approximation of feasibility requirements. Note also, that when ΔT_{mean} is employed, then the Kuhn-Tucker system for the determination of λ's and μ's is a linear system. The algorithm has been implemented using the modelling language GAMS (Brooke *et al.*, 1988) and for fixed exchange matches a flexible and economically optimal network is obtained *at <u>one</u> synthesis step.*

In general, since only limited HEN structures are explored (exchangers in series and/or isothermal parallel exchangers), the above HEN synthesis problem provides an upper bound to the total cost of a <u>flexible</u> HEN. More complex HEN structures can be further explored using the iterative strategy of Figure 2.3.

An example will be presented to illustrate the performance of the proposed algorithm.

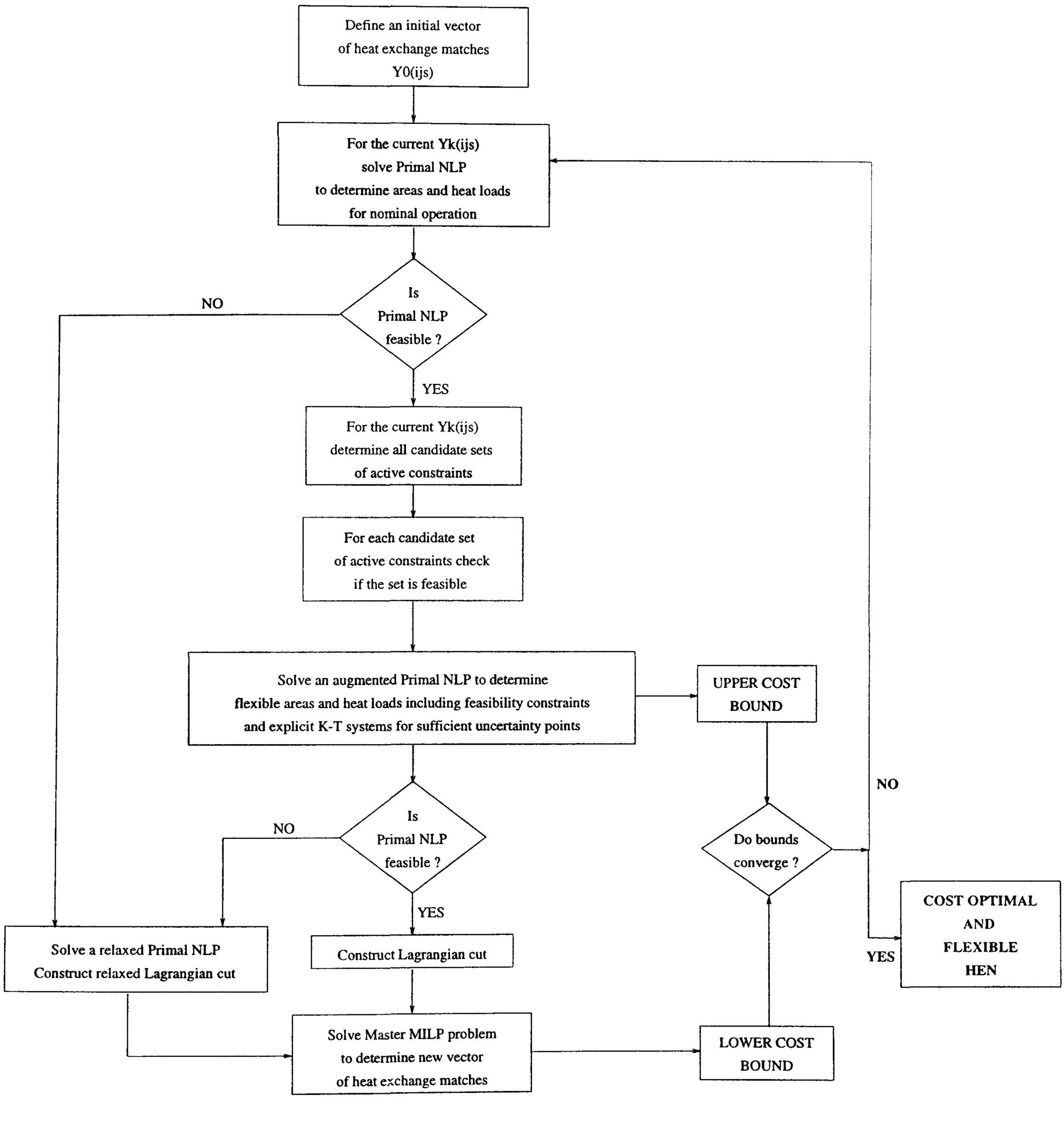

Figure 2.19: Flexible and Economically Optimal HEN

Steam	T^{in} (K)	T^{out} (K)	FCP (kW/K)	Cost ($/kWyr)
H1	443	333	30	
H2	423	303	15	
C1	293	408	20	
C2	353	413	40	
Steam	450	450		80
Water	293	313		20

Table 2.12: Stream data for Example 2.5

Heat Transfer Coefficients	
Process streams	$0.8\ kW/m^2K$
Steam	$1.2\ kW/m^2K$
Cost of Heat Exchanger Area	
Process exchangers	$\$\ 1000A^{0.6}/yr$
Heaters	$\$\ 1200A^{0.6}/yr$

Table 2.13: Heat Exchange data for Example 2.5

Example 2.5

Consider the integration of two hot streams and two cold streams (Yee and Grossmann, 1990) in a HEN with exchangers is series or parallel exchangers with isothermal mixing. Steam and cooling water are available for additional heating and cooling requirements. Stream and cost data are given in Table 2.12. Heat exchange data are given in Table 2.13.

The inlet temperature of $H1$ varies as follows:

$$443\ K \leq T_{H1}^{in} \leq 453\ K$$

A flexible and economically optimal network is sought (with a minimum total annualized cost).

The HEN synthesis problem is solved for the nominal operating point ($T_{H1}^{in} = 443\ K$). The resulting network (see Figure 2.20) features a total annualized cost of $\$73011/yr$. Exchanger areas are given in Table 2.14. The network features a flexibility index of 0.004.

	H1.C1.1 (m^2)	H1.C2.1 (m^2)	H1.C1.2 (m^2)	H2.C1.1 (m^2)	H2.CW.2 (m^2)
Nominal Operation	10.47	193.6	22.7	173.6	37.6
Flexible Operation	19.13	193.6	22.7	173.6	37.5

Table 2.14: Exchanger Areas for Example 2.5

Starting from the heat exchange matches proposed by the nominal point optimization, all the candidate active sets are sought to construct feasibility functions for the augmented Primal NLP problem. 78 candidate active sets are identified, 52 of which may be feasible and define feasibility functions in an augmented Primal problem. The optimal and flexible network is obtained in one synthesis iteration and is illustrated in Figure 2.20. It features the same structure (stream matches in this representation) as the nominally optimal one, but increased exchanger area for $H1.C1.1$ (see Table 2.14), corresponding to a total annualized cost of \$ 74794.7 $/yr$. Active χ-feasibility functions at the proposed network are the ones defined by the following active sets:

– Exchanger area of $H1.C1.1$ and driving force at the hot outlet of $H1.C2.1$, for nominal operation.

– Exchanger areas of $H1.C1.1$ and $H1.C1.2$, for uncertainty vertex operation.

– Exchanger areas of $H1.C1.2$ and $H1.C2.1$, for nominal operation.

– Exchanger areas of $H1.C2.1$ and $H2.C1.1$, for nominal operation.

2.9 Summary

In this chapter a synthesis/retrofit strategy has been presented for flexible and economically optimal HENs. The strategy is based on an MINLP synthesis/retrofit model, developed through a multiperiod hyperstructure representation of heat integration alternatives. The network structure is determined through simultaneous optimization of the total operating and capital investment cost and is flexible to operate under the specified conditions (periods). A desired flexibility target can be achieved through an iterative procedure between a flexibility analysis step and the MINLP problem, exploiting the three-way trade-off between flexibility-operating cost and capital cost. An upper cost bound for flexible operation can be obtained in one synthesis step, as described in the

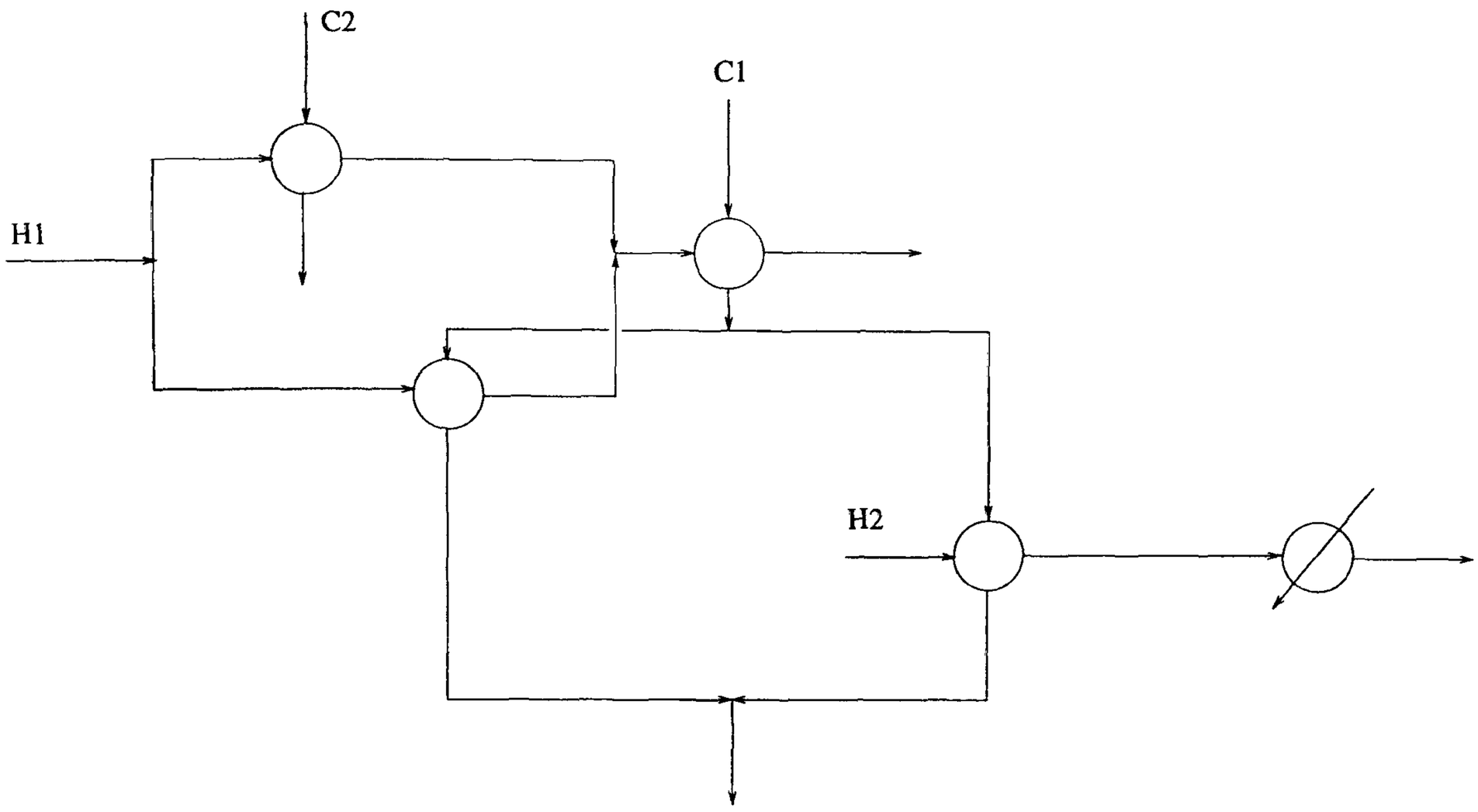

Figure 2.20: Optimal Network for Example 2.5

last section, introducing explicit feasibility constraints in a HEN synthesis problem, to predict optimal heat exchange matches, heat load distribution and exchanger areas.

Chapter 3

Controllability Aspects in HENs Synthesis and Retrofit Design

Controllability requirements are introduced in the synthesis and/or retrofit design problems of HENs in this Chapter. Structural controllability is examined first, based on a variable HEN structural matrix (section 3.2). An explicit criterion for structural total disturbance rejection is developed and introduced to the HEN synthesis/retrofit problem. Time responses and gains are then studied simultaneously with optimal HEN design and operating point and simple controllability criteria are included in the HEN synthesis/retrofit problem, to determine a network with a favourable control scheme (section 3.9). Example problems are presented to illustrate the effect of controllability objectives in HEN synthesis.

3.1 Introduction

Flexibility requirements in the synthesis and/or retrofit design of heat exchanger networks result in networks that are able to operate under uncertain stream flowrates, temperatures and heat transfer coefficients. This is mainly achieved by properly utilizing the existence of control variables, that can be adjusted for the network to operate feasibly, and/or overdesign. In the small network of Figure 3.1 optimal overdesign of exchangers 1 and 2 is sufficient to compensate for F_{H1} and F_{H2} variations. Suppose, however, that the inlet temperature of $H1$ may vary within a small range and at high frequency (*disturbance*), while the outlet temperature of $H2$ must be maintained always at its target value. The synthesis/retrofit framework for flexibility is not sufficient to provide a *controllable* network, where the effect of the disturbance input T_{H1}^{in} on the control objective T_{H2}^{out} can be counteracted efficiently by a manipulated variable. In order to obtain a controllable network, controllability requirements must be introduced to the synthesis stage.

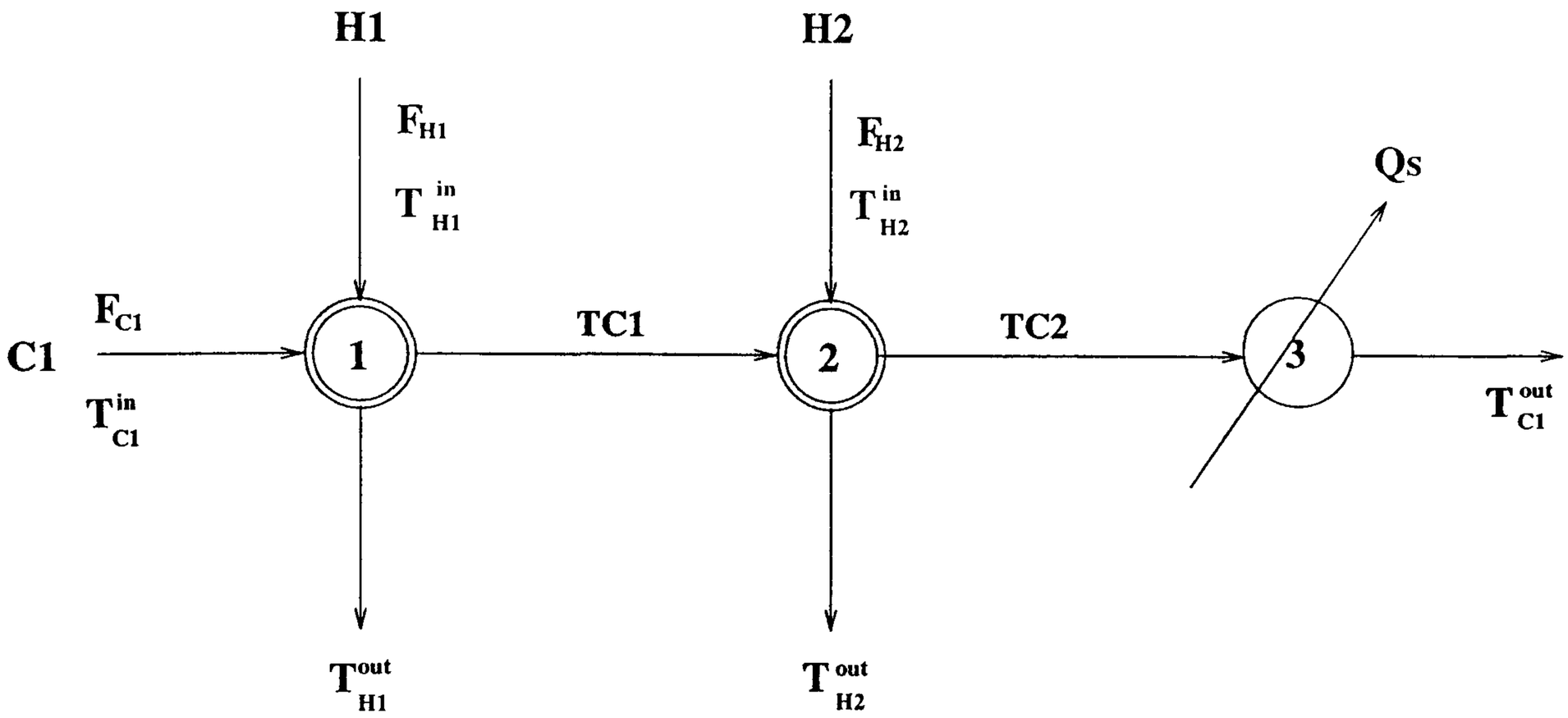

Figure 3.1: Retrofitted network (flexibility considerations)

Controllability considerations at the early design stages were attempted by several researchers, whereas a number of tools and controllability measures have been developed to aid exploring the interactions between process design and control.

When little information about the process is available, structural controllability is the easiest to assess. The notion was introduced by Lin (1976) and makes use of structural matrices. Concepts of accessibility and disturbability were introduced, focussing on the effectiveness of potential feedback control. Morari and Stephanopoulos (1980) define a system as structurally controllable based on the generic rank of its structural matrix representation. Johnston and Barton (1985) proposed an algorithm to assess the structural controllability of SISO systems, based mostly on inspection. Georgiou and Floudas (1989*a*) have proposed a mathematical LP formulation for the determination of the generic rank of a matrix and formulated mathematical conditions for feasible control systems from a structural controllability point of view (Georgiou and Floudas, 1989*c*). Thus, structural analysis even for large-scale systems can be carried out in a more systematic way. The same authors (Georgiou and Floudas, 1989*b*), in an attempt to take into account structural controllability and economic aspects, introduced the variable structural matrix concept, based on a superstructure representation of the heat integrated alternatives. Their work on disturbance propagation in heat recovery systems can be used mostly as a screening tool during the HEN synthesis phase. A knowledge based engineering approach to the structural controllability of HEN

is proposed by Huang and Fan (1988). They define a disturbance propagation table, where the relations between disturbances and controlled variables is heuristically quantified and propose a structural controllability index, which then they incorporate in the HEN synthesis problem.

Daoutidis and Kravaris (1992) address the problem of structural evaluation of control configurations for multivariable nonlinear processes. They propose relative order as an analysis tool, as it requires only structural information about the process. General structural evaluation guidelines are proposed based on the properties of relative order.

Singular Value Analysis (SVA) was introduced by Doyle and Stein (1981) to assess the performance of a control scheme with less computational effort than dynamic simulations. Arkun *et al.* (1984) based their analysis on singular values to evaluate the robustness properties of control schemes. Johnston and Barton (1987) proposed a scaling procedure of the variables of the system model, so as to achieve efficient results through SVA on the control scheme performance and the sensitivity to modelling errors.

Perkins and Wong (1985) introduced the condition number as a more general measure to relate errors in the process model to errors in the manipulated variables. Later, Skogestad and Morari (1987) formulated a disturbance condition number to measure the effect of rejecting disturbances.

To evaluate alternative sets of manipulated and controlled variables, the Relative Gain Array (Bristol, 1966) is utilized and a number of pairing rules have been proposed (Bristol, 1966; McAvoy, 1983) to provide stable control schemes.

Dynamic controllability of heat exchanger networks and process flowsheets, in general, has mostly been considered after the synthesis procedure has resulted in a steady-state economical design and mostly through an analysis scope. Morari (1983) proposed a general framework for the controllability analysis and comparison of alternative flowsheets and showed that dynamic controllability is an inherent feature of the design, independent of the control policy that is applied. Holt and Morari (1985) pointed out that decreasing the time delays in the transfer function may or may not result in improved performance of the process, but they did not propose any guidelines to improve the controllability characteristics of the system. Jensen et al. (1986) reviewed proposed interaction measures for multivariable control systems and explored their applicability and validity in closed-loop systems. Classifying input-output transmittances into direct, parallel and interaction components, they located the shortcomings of interaction quotient, RGA, relative dynamic gain

array, average gain array and transient response functions, proposing the Direct Nyquist Array for interaction analysis. Shamugathasan and Johnston (1988) proposed an algorithm to locate the delays that should be increased to come up with a design with enhanced dynamic operability, which involved inversion of the transfer matrix. Psarris and Floudas (1990, 1991) addressed the problem of assessment and enhancement of dynamic operability of MIMO systems with time delays and transmission zeroes. They proposed an MILP-based framework to improve the decoupling response bound of a chemical process. Their approach, although applicable to HENs and easy to implement since it does not require the inversion of the transfer function matrix, does not account for structural changes in a network that would lead to different transfer functions.

Considering interactions between process design and process control, Lenhoff and Morari (1982) proposed a design approach that takes into consideration economic and dynamic aspects simultaneously, within a multiobjective framework. A multiobjective formulation is also proposed by Palazoglu and Arkun (1986) to address the design of chemical plants with robust operability characteristics, where robustness indices are used to describe the dynamic operability of fixed-structure flowsheets.

Simultaneously considering controllability and economic aspects, Luyben and Floudas (1994) proposed a multiobjective optimization approach to include process controllability considerations, based on open-loop indicators, within the process synthesis model. Towards the same direction of accounting for interactions between process design and process control, Narraway *et al.* (1991) combined conventional non-linear steady-state optimization with linearized dynamics, steady-state economics and functional controllability analysis to study the impact of disturbances on plant economics. Along the same lines, in a later paper, Narraway and Perkins (1993) proposed an optimization scheme for the selection of control structures, based on their economic performance.

Applying integrated process design and control techniques to chemical wastewater treatment, Walsh and Perkins (1992) employ controllability tests, based on the required time before a feedback control system begins to counteract a disturbance (to screen process/control structures) and worst case design techniques to result in a process design that can handle parametric uncertainty.

Mathisen and Skogestad in a series of papers (Mathisen *et al.*, 1992*a*; Mathisen *et al.*, 1992*b*; Mathisen *et al.*, 1993), have introduced operability considerations (static and dynamic resilience) within the synthesis problem studying the effect of bypass placement on the operability of a heat exchanger network. Their proposed approach includes a number of optimization

problems where the synthesis objectives are the minimization of the cost and the derivation of a control scheme, through screening various controllability measures. Although the economic trade-offs between controllability and cost are addressed, their proposed synthesis approach is limited to fixed-match networks and lacks a systematic incorporation of controllability requirements within the synthesis procedure, where all alternatives are included. Varga and Hangos (1993), in an attempt to connect HEN controllability to structural properties that can be exploited during synthesis, explore HEN structures embedded within the superstructure representation through dynamic considerations, either via numerical simulation or qualitative prediction. They do not propose, however, a systematic method to connect even qualitative information on dynamics to the synthesis procedure.

The major difficulty of considering both process economics and controllability aspects during the design/synthesis phase, when the structure and operating conditions of the process system have not been determined, is that the greater part of the developed control theory refers to closed-loop controllability (for fixed plant design and layout), where process dynamics and stability can be rigourously assessed, whereas even the open-loop indicators are based on linearized models. This chapter focusses on the incorporation of controllability aspects in the synthesis and retrofit design of heat exchanger networks. First, structural characteristics of the network will be exploited at the synthesis (and/or retrofit design) level, to ensure *total disturbance rejection*, *i.e.* that *there are* manipulated variables, which can be adjusted so that the disturbance effect on the stream temperatures of interest is alleviated. In the second part of the chapter, HEN dynamic aspects will be studied and control structure selection will be introduced at the synthesis/retrofit design level, rather to provide HENs with favourable controllability characteristics, than networks with optimal control schemes. Simple controllability criteria are formulated and included in the synthesis procedure, to assess trade-offs between controllability and economics.

3.2 Total Disturbance Rejection in the Synthesis of HENs

The HEN synthesis/retrofit problem stated in section 2.1 is here enhanced by:

- A set of *controlled variables* (outlet or intermediate stream temperatures) that must be maintained at their target values or within specified range.
- A set of *disturbance inputs* (usually inlet stream temperatures).

The proposed network must feature minimum total annualized cost (synthesis or retrofit) and total disturbance rejection with respect to the specified controlled variables and disturbances (*structural controllability target*). Flexibility requirements can also be included and are handled by the synthesis/retrofit framework for flexibility developed in Chapter 2.

The synthesis/retrofit problem now becomes:

$$\min_{(\Delta)V_d,V_x,V_z} \text{(total annualized synthesis cost)}$$

s.t.

$$\left.\begin{aligned} h(V_\theta, V_x, V_z, V_d) &= 0 \\ f(V_\theta, V_x, V_z, V_d) &\leq 0 \end{aligned}\right\} \quad \forall V_\theta \in U(V_\theta) \qquad \textbf{(PC1)}$$

$$V_c \text{ undisturbable from } V_i$$

The disturbability of a controlled output x from a disturbance input d can be assessed through structural analysis of the network, when only state variables and disturbances are considered (Georgiou and Floudas, 1989*c*). In particular, the disturbance propagation can be analysed on the basis of the generic rank of the structural matrix of the network (see Appendix D). In such an analysis, *a controlled variable x is not disturbable from the disturbance input d if the generic rank of the network structural matrix, when the $x-$column is not considered, is strictly less than the number of the active rows of the matrix)*, *i.e.*

$$\mathbf{GR}\{\mathbf{M}(V_c, V_x, V_z, V_i)\} \leq AR\{\mathbf{M}(V_c, V_x, V_z, V_i)\} - 1$$

The synthesis/retrofit problem then becomes:

$$\min_{(\Delta)V_d,V_x,V_z} \text{(total annualized synthesis cost)}$$

s.t.

$$\left.\begin{aligned} h(V_\theta, V_x, V_z, V_d) &= 0 \\ f(V_\theta, V_x, V_z, V_d) &\leq 0 \end{aligned}\right\} \quad \forall V_\theta \in U(V_\theta) \qquad \textbf{(PC)}$$

$$\mathbf{GR}\{\mathbf{M}(V_c, V_x, V_z, V_i)\} \leq AR\{\mathbf{M}(V_c, V_x, V_z, V_i)\} - 1$$

Based on this, a sufficient total disturbance rejection criterion may be developed, exploiting the hyperstructure network representation.

To account for all structures embedded within the hyperstructure and their corresponding structural matrices, the concept of the variable structural matrix, introduced by Georgiou and Floudas (1989*b*), is extended to the case of the hyperstructure network representation. In particular, a structural matrix is developed for the network hyperstructure model, where the rows and columns refer to the equations and variables of the model. The existence of these rows and variables in the structural matrix is connected directly to the network structural variables (that refer to the existence of stream matches - exchangers, bypass pipes, etc.). Three additional sets of binary variables are introduced:

- binary variables to denote the existence of an equation-row to the set of the active rows of the system when the generic rank is determined, p.
- binary variables to denote the existence of a variable-column to the set of the active columns of the system when the generic rank is determined, q.
- binary variables to denote that a variable j is an output variable of a row i, r. These variables are defined to represent the arbitrary entries in the network structural matrix.

For the case of heat exchanger network hyperstructure, where the disturbance and controlled variables are temperatures, the equations that describe the system are the energy balances for the hot and cold process streams. The variable structural matrix is illustrated in Table 3.1. The presence of manipulating inputs in the network will be associated with the corresponding affected state temperature variable, which will then constitute a controlled variable with a non-active column.

Since the disturbance rejection criterion involves only controlled variables, disturbances and state variables, manipulating variables such as stream flowrates and utility loads do not participate in the variable structural matrix. The existence of each "row" and each "column" in the matrix depends on the existence of the corresponding stream match in the network, whereas the presence of each variable in each equation depends also on the existence of certain piping segments in the network. For a certain vector of the structural binary variables, the generic rank of the corresponding network matrix can be evaluated through a simple maximization LP problem (see Appendix D). The explicit formulation of this LP is included within the synthesis/retrofit MINLP model. The structural matrix that corresponds to each vector of the network structural variables results from the following constraints:

energy balances	$t_{j,s}^{h,O,i}$	$t_{i,s}^{c,O,j}$	$t_{j,s}^{h,I,i}$	$t_{i,s}^{c,I,j}$	$t_{j,s}^{h,FO,i}$	$t_i^{c,FO,j}$	$\mathbf{T}_i^O$	$\mathbf{T}_j^O$	$\mathbf{T}_i^I$	$\mathbf{T}_j^I$	
hot-side ex	r_{ehe}^{hOijs}	r_{ehe}^{cOijs}	r_{ehe}^{hIijs}	r_{ehe}^{cIijs}							p_{ijs}^{ehe}
cold-side ex	r_{ece}^{hOijs}	r_{ece}^{cOijs}	r_{ece}^{hIijs}	r_{ece}^{cIijs}							p_{ijs}^{ece}
hot mixer b.e.			r_{ehae}^{hIijs}		$r_{ehaeij}^{hFOij's'}$				r_{ehae}^{HIij}		p_{ijs}^{ehae}
cold mixer b.e.				r_{ecae}^{cIijs}		$r_{ecaeij}^{cFOi'js'}$				r_{ecae}^{CIij}	p_{ijs}^{ecae}
hot mixer a.e.	r_{ehpe}^{hOijs}		r_{ehpe}^{hIijs}		r_{ehpe}^{hFOijs}						p_{ijs}^{ehpe}
cold mixer a.e.		r_{ecpe}^{cOijs}		r_{ecpe}^{cIijs}		r_{ecpe}^{cFOijs}					p_{ijs}^{ecpe}
hot final mix					r_{he}^{hFOijs}		r_{he}^{Oi}		r_{he}^{Ii}		p_i^{he}
cold final mix						r_{ce}^{cFOijs}		r_{ce}^{Oj}		r_{ce}^{Ij}	p_j^{ce}
	$qt_{js}^{h,O,i}$	$qt_{is}^{c,O,j}$	$qt_{js}^{h,I,i}$	$qt_{is}^{c,I,j}$	$qt_{js}^{h,FO,i}$	$qt_{is}^{c,FO,j}$	$q\mathbf{T}_i^O$	$q\mathbf{T}_j^O$	$q\mathbf{T}_i^I$	$q\mathbf{T}_j^I$	

Table 3.1: Variable structural matrix for network hyperstructure

- Constraints (3.1)-(3.4) ensure that if a stream match does not exist in the network ($y_{ijs} = 0$) the corresponding energy balances and temperature variables do not participate in the network's structural matrix.

$$p_{ijs}^{ehe} + p_{ijs}^{ehae} + p_{ijs}^{ehpe} - y_{ijs}\mathbf{M} \leq 0 \quad i \in HP,\ j \in R_i,\ s \in IS \tag{3.1}$$

$$p_{ijs}^{ece} + p_{ijs}^{ecae} + p_{ijs}^{ecpe} - y_{ijs}\mathbf{M} \leq 0 \quad j \in CP,\ i \in R_j,\ s \in IS \tag{3.2}$$

$$qt_{js}^{h,O,i} + qt_{js}^{h,I,i} + qt_{js}^{h,FO,i} - y_{ijs}\mathbf{M} \leq 0 \quad i \in HP,\ j \in R_i,\ s \in IS \tag{3.3}$$

$$qt_{is}^{c,O,j} + qt_{is}^{c,I,j} + qt_{is}^{c,FO,j} - y_{ijs}\mathbf{M} \leq 0 \quad j \in CP,\ i \in R_j,\ s \in IS \tag{3.4}$$

where **HP** and **CP** are the sets of hot and cold process streams, R_i, R_j the sets of possible matches for the hot and cold streams and IS the set that includes the possibilities of multiple heat exchange between two stream (see Appendix B).

- Similarly, constraints (3.5)-(3.6) state that if a bypass stream exists in an exchanger the final outlet temperature of the stream is a manipulated variable and must not be considered in the disturbance rejection criterion.

$$qt_{js}^{h,FO,i} - (1 - a_{js}^{i}) \leq 0, \quad i \in HP,\ j \in R_i,\ s \in IS \tag{3.5}$$

$$qt_{is}^{c,FO,j} - (1 - a_{is}^{j}) \leq 0, \quad j \in CP,\ i \in R_j,\ s \in IS \tag{3.6}$$

The outlet temperatures of utility exchangers are also controlled variables:

$$qt_{js}^{h,O,i} - (1 - y_{ijs}) \leq 0, \quad i \in HP,\ j \in \mathbf{CU},\ s \in IS \tag{3.7}$$

$$qt_{is}^{c,O,j} - (1 - y_{ijs}) \leq 0, \quad j \in CP,\ i \in \mathbf{HU},\ s \in IS \tag{3.8}$$

Also, when an input temperature is considered constant its corresponding q-variable is set to zero.

When the structure is represented by the vector of the structural binary variables (y, w, z, a, b) (see Figure 2.5) the number of the active rows of the structural matrix AR is equal to:

$$AR = \mid \mathbf{HP} \mid + \mid \mathbf{CP} \mid + 3 \sum_{i \in HP} \sum_{j \in R_i} y_{ijs} + 3 \sum_{j \in CP} \sum_{i \in R_j} y_{ijs} \tag{3.9}$$

where $\mid \mathbf{HP} \mid$ and $\mid \mathbf{CP} \mid$ are the cardinalities of **HP** and **CP** sets respectively.

Thus, for the structure to satisfy the disturbance rejection criterion the following condition must hold:

$$\mathbf{GR} = \max_{p,q,r} GR \leq AR - 1$$

and the synthesis/retrofit problem for disturbance rejection becomes:

$$\min_{(\Delta)V_d,V_x,V_z} \text{(total annualized synthesis cost)}$$

s.t.

$$\left.\begin{array}{rcl} h(V_\theta, V_x, V_z, V_d) & = & 0 \\ f(V_\theta, V_x, V_z, V_d) & \leq & 0 \end{array}\right\} \quad \forall V_\theta \in U(V_\theta) \qquad (\mathbf{PC}')$$

$$\mathbf{GR} = \max_{p,q,r} GR \leq AR - 1$$

$$s.t. \qquad (3.1) - (3.9) \text{ and the LP-constraints of Appendix D}$$

To overcome the maximization problem involved in the disturbance rejection criterion, one should solve parametrically (with respect to the structural binary variables) the optimization problem for the determination of the generic rank. Instead, we introduce *a scalar variable* u, such that:

$$\min_{\Delta V_d,V_x,V_z} \text{(total annualized cost (synthesis or retrofit) - M' u)}$$

s.t.

$$\left.\begin{array}{rcl} h(V_\theta, V_x, V_z, V_d) & = & 0 \\ f(V_\theta, V_x, V_z, V_d) & \leq & 0 \end{array}\right\} \quad \forall V_\theta \in U(V_\theta) \qquad (\mathbf{PC}'')$$

$$GR \geq u \qquad (3.10)$$

$$GR \leq AR - 1 \qquad (3.11)$$

$$s.t. \qquad (3.1) - (3.9) \text{ and the LP-constraints of Appendix D}$$

The introduction of u in the objective function via a penalty parameter M' (large positive number) penalizes any evaluation of GR less than the maximum. The minimization of the objective function of $(\mathbf{PC}'')$ will lead to the maximization of u and subsequently, due to constraint (3.10) to the maximization of GR, *i.e.* a consistent evaluation of the generic rank. The penalty parameter M' can be evaluated based on the optimality conditions of $\mathbf{PC}'$ and $\mathbf{PC}''$, so that the two problems

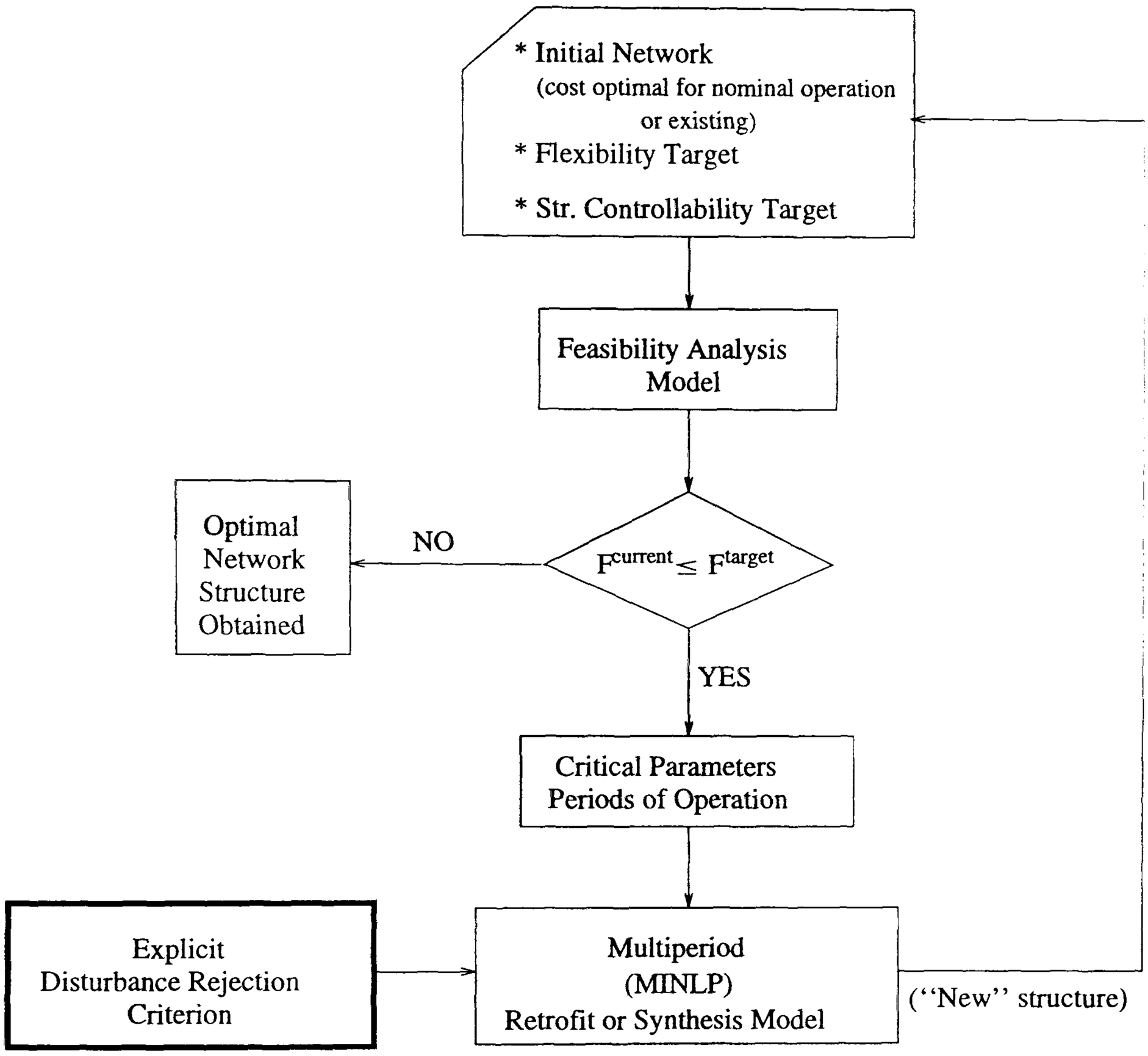

Figure 3.2: Iterative approach for flexibility and structural controllability

are equivalent for each network structure (see Appendix D). On the other hand, due to 3.9, the obtained structure will feature structural total disturbance rejection.

The variable structural matrix and the total disturbance rejection criterion can be introduced straightforwardly to the multiperiod synthesis/retrofit MINLP model. Thus, the framework for flexibility is enhanced to include structural controllability requirements (see Figure 3.2).

3.3 Computational Aspects

The multiperiod synthesis/retrofit model with the explicit disturbance rejection criterion constitutes a mixed integer nonlinear programming model which features not only a large number of continuous variables but also a large number of binary variables, after the introduction of the structural controllability variables. Generalized Benders decomposition (Geoffrion, 1972; Paules IV and Floudas, 1989) is employed also for the solution of the enhanced MINLP synthesis/retrofit problem, where the set of structural variables $(y, w, x, a, b, z, d, v, m)$ are selected as the complicating variables and the MINLP model is decomposed into a primal subproblem (consisting of the synthesis/retrofit constraints, constraints (3.1)-(3.11) and the LP-constraints of Appendix D) and a master MILP subproblem (as in the synthesis/retrofit case for multiperiod operation).

When the structural variables are fixed, constraints (3.1)-(3.9) become simple bounds and the remaining constraints for the $p-$, $q-$ and $r-$ variables form a totally unimodular matrix (Georgiou and Floudas, 1989*a*; Garfinkel and Nemhauser, 1972). This implies that these variables will take an integer value at the optimal solution and they can be relaxed to continuous variables. Thus, the Primal subproblem can be solved as a NLP and the number of binary variables in the overall problem is thus greatly reduced.

Note that in the proposed iterative strategy, the multiperiod synthesis-retrofit step results in an undisturbable structure, due to the explicit rejection criterion in (3.11), when GR is properly maximized. The consistent evaluation of the generic rank depends upon the proper selection of the penalty parameter $\mathbf{M}'$, in problem $(\mathbf{PC}'')$. As shown in Appendix D when the structural variables are fixed there is a critical value of $\mathbf{M}'$ for which the primal subproblems of $(\mathbf{PC}')$ and $(\mathbf{PC}'')$ are equivalent. However, very large values of $\mathbf{M}'$ can lead to solutions that are far from economical optimality, which corresponds to the "small" part of the objective function. A proper value of $\mathbf{M}'$ can be obtained from the optimality conditions of $\mathbf{PC}'$ and $\mathbf{PC}''$ (see Appendix D) or by solving the multiperiod model for several values of $\mathbf{M}'$ and applying the disturbability test to test the consistency of the solutions.

Alternatively, the disturbance rejection requirement can be introduced as a screening tool during the synthesis iterations. As the structure is temporarily fixed, the LP-generic rank problem can be solved to determine the generic rank of the current network structure. If the structure satisfies the disturbance rejection criterion the network is optimized to determine the best economical

operating conditions. Otherwise, the structure is rejected and a relaxed Lagrangian cut is derived from the solution of the relaxed problem.

3.4 Examples

Example 3.1

Consider the network of Figure 3.1. The outlet temperature of $H2$ is "disturbable" from the disturbance input T_{H1}^{in}. This is obvious from the "downstream path" (Linnhoff and Kotjabasakis, 1986) from T_{H1}^{in} to T_{H2}^{out}. This can also be proved more systematically through structural analysis of the network (Georgiou and Floudas, 1989*c*) (see Appendix D). The retrofit model for flexibility and total disturbance rejection is developed. Flexibility requirements are taken into account considering two periods of operation, the nominal and the operating condition of greater violation of the network feasibility constraints:

$$F_{H1}^{N} = 3\ KW/^{o}C \qquad F_{H2}^{N} = 4\ KW/^{o}C$$

$$F_{H1}^{cr} = 4\ KW/^{o}C \qquad F_{H2}^{cr} = 5\ KW/^{o}C$$

The variable structural matrix is also developed, where T_{H1}^{in} is considered as disturbance and T_{H2}^{out} as controlled variable. The MINLP retrofit model is solved via Generalized Benders Decomposition. The NLP primal featured 366 rows and 328 continuous variables, whereas the Master MILP involved 118 row and 81 variables, 67 of which discrete. The solution was obtained in 5 GBD iterations (CPU time = 14.63 sec on a SPARC-10 workstation). The retrofitted structure is depicted in Fig. 3.3. It features a bypass stream of $H1$ around exchanger 1 and increased exchanger areas.

$$A_1' = 72.34\ m^2 \qquad A_2' = 107\ m^2$$

The proposed retrofitted network features a total annualized cost (TAC) of \$35093 yr^{-1}.

In the retrofitted network the number of the active rows of the system is equal to 7, whereas the generic rank of the corresponding $(\mathrm{M}^{*}\mid_{c=T_{H2}^{out}}, D)$ is equal to 6. Thus, the network features total disturbance rejection.

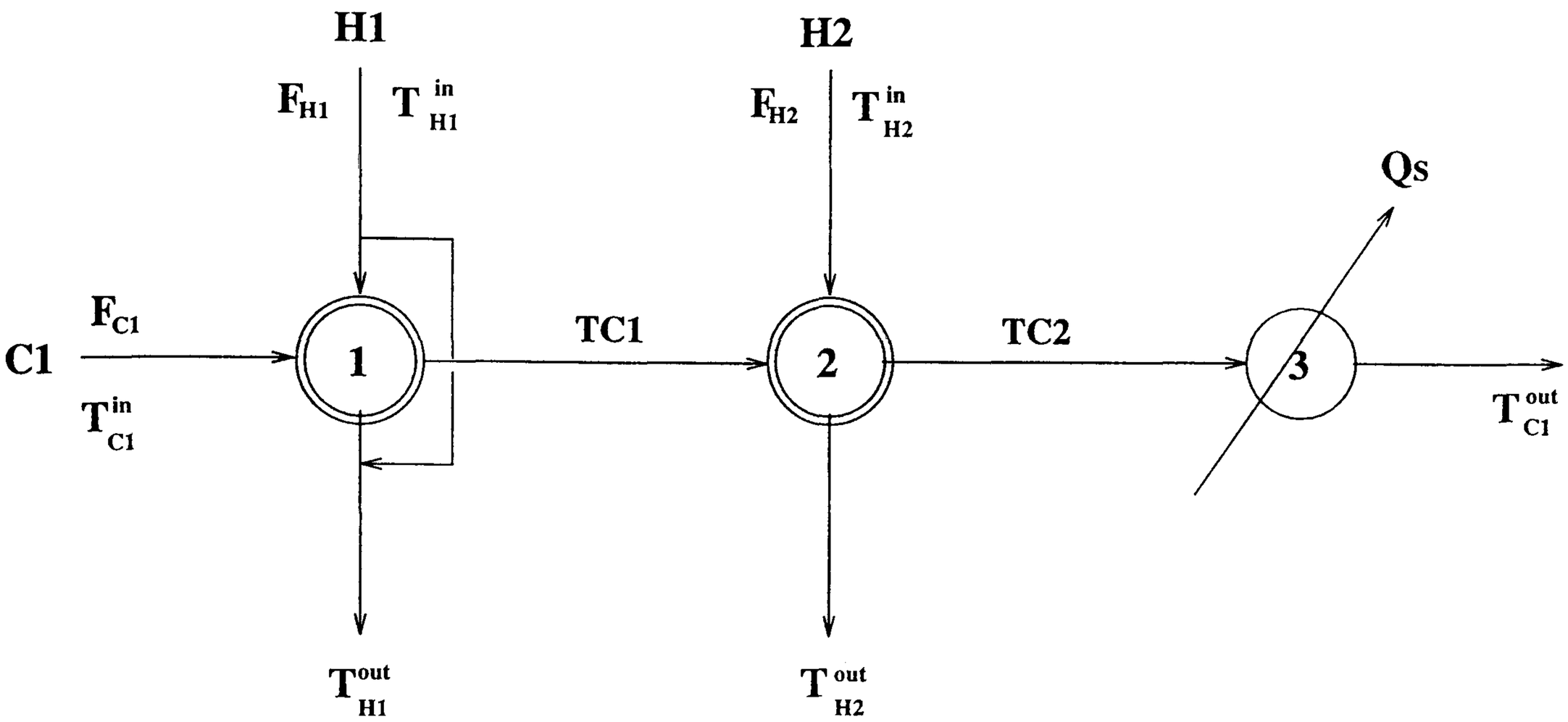

Figure 3.3: Retrofitted network (for flexibility and Disturbance Rejection) for Example 3.1

When only total disturbance rejection is required no area increase is necessary and the bypass stream at exchanger 1 (with a $TAC = \$6900 yr^{-1}$ of retrofit) is the optimal choice for an "undisturbable" network (see Figure 3.4). However, such a retrofit action would only lead to a flexibility index of 0.437.

Example 3.2

When more than one control objectives and disturbances are involved, the disturbance rejection criterion is developed for each controlled variable. Consider the network illustrated in Figure 3.5. It involves two hot and three cold process streams. Flowrate, inlet temperature data as well as bounds on outlet temperatures are given in Table 3.2. The existing network has resulted from the optimization of the energy recovery and the number of units at a first stage, and of the area capital cost (Georgiou and Floudas, 1989*b*). Exchanger data are given in Table 3.5. We consider here a 10% overdesign for the heat exchanger areas. A minimum temperature approach of $\Delta T_{min} = 10^oC$ is considered.

The heat capacity flowrate of $H1$ varies within the range:

$$14\ KW/^oC \leq Fcp^{H1} \leq 18\ KW/^oC$$

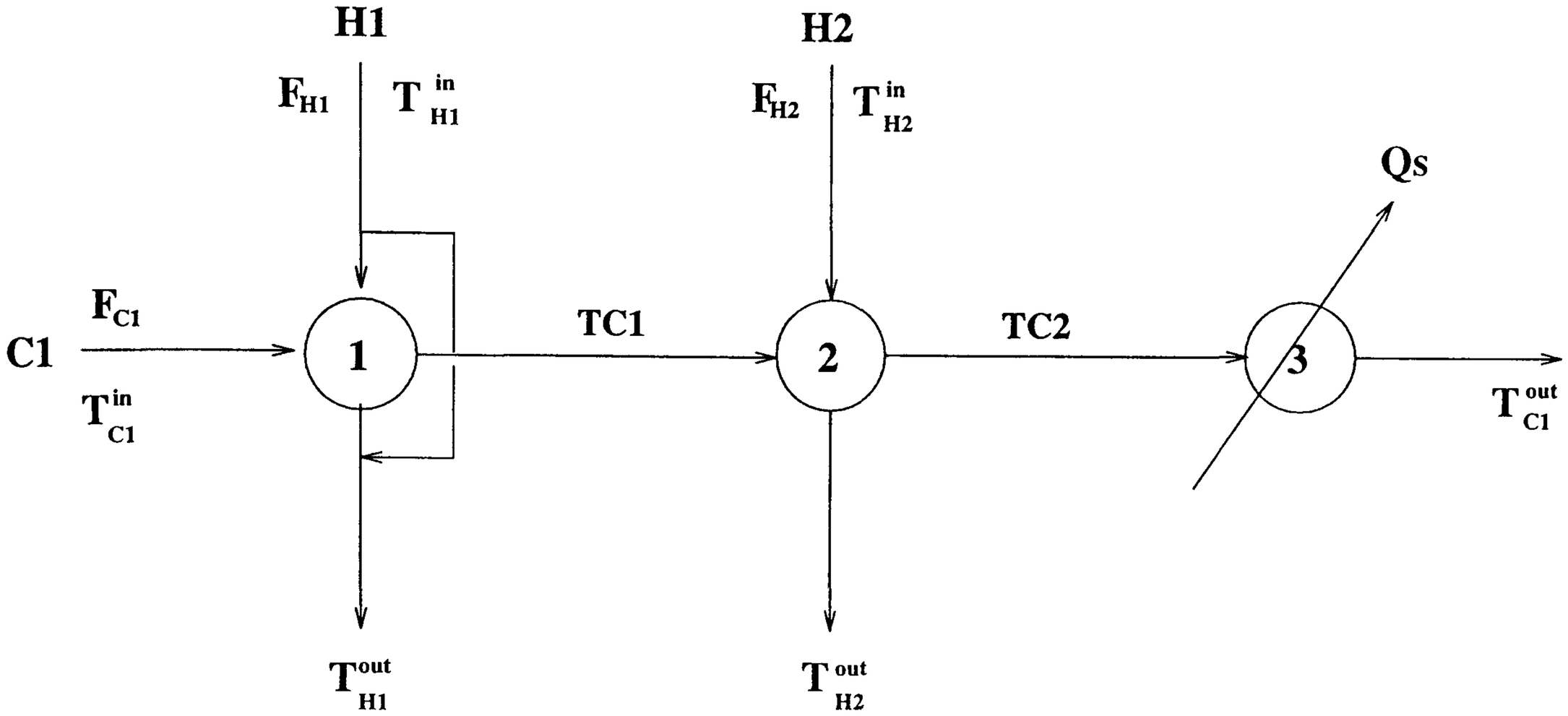

Figure 3.4: Retrofitted network (for Disturbance Rejection only) for Example 3.1

The outlet temperatures of $H1$ and $C3$ are given control objectives, whereas the inlet temperatures of $C1$ and $C2$ are disturbance inputs. As it can be seen in Figure 3.5 T^{out}_{C3} is not disturbable. However, T^{out}_{H1} is disturbable from T^{in}_{C1} and T^{in}_{C2}.

Considering the flexibility of the existing network towards the variations of Fcp^{H1}, a feasibility test reveals that 10% overdesign of the exchanger areas was not enough to compensate for the uncertainty in Fcp^{H1}.

The multiperiod retrofit model for flexibility and total disturbance rejection is developed for three periods of operation, defined by the nominal and the two extreme values of Fcp^{H1}. Retrofit cost data are given in Table 3.4. The model involves 1712 rows and 1511 variables, of which 225 are binary. The MINLP synthesis problem was solved on a SPARC-2 workstation and the solution was obtained in 17 GBD iterations (CPU time 590 sec). The obtained network is illustrated in Figure 3.6. It features a total annualized retrofit cost of $TAC = \$\ 44703.56/yr$ and an average utility consumption of 1064 kW (optimizing outlet temperatures, while the minimum utility consumption for nominal operation and fixed outlet temperatures is 1076 kW). The areas of the heat exchangers are shown in Table 3.5. In the retrofitted network bypass streams are added at exchangers 3 and 4 and from exchanger 2 to 3 so that T^{out}_{H1} is undisturbable (in structural terms). The area of exchanger 1 has been increased by 22%. Note that the multiperiod retrofit model for flexibility

STREAM No.	T_N^{in} (^oC)	T^{out} (^oC)	FCP^N (KW/K)
H1	249	121	$14 \leq F \leq 18$
H2	205	66	14
C1	38	130	10
C2	126	182	12
C3	93	195	13
CW	30	40	
Steam	300	300	

Table 3.2: Stream data for Example 3.2

	C1	C2	C3	CW
H1	0.10909	0.2222	0.17143	0.17
H2	0.1	0.1875	0.15	0.1678

Table 3.3: Heat transfer coefficients, in KW/m^2K

only results in the network topology of Figure 3.5, *i.e.* with no bypass streams and in an area increase of exchanger 4, as shown in Table 3.5.

When stream repiping and exchanger reassignment is not penalized the multiperiod MINLP retrofit model leads to the network of Figure 3.7. It features the same number of exchangers as the existing network, but streams $C1$ and $C2$ (disturbances) do not affect at all $H1$ and $C3$. Exchangers are reassigned and the areas of exchangers 4 and 5 are increased (stream matches $H2-C1$ and $H2-C2$ correspondingly) as shown in Table 3.5). The capital cost for the area increase is \$ 21109.7 $/yr$, whereas the average water consumption is 1018.33 kW.

	Cost
Cooling water	5.031 $\$KW^{-1}yr^{-1}$
Steam cost	11.05 $\$KW^{-1}yr^{-1}$
Fixed cost of making a new match	1200 $\$yr^{-1}$
Fixed cost of reassigning an exchanger	1000 $\$yr^{-1}$
Piping cost	10000 $\$yr^{-1}$
Area cost	$1200A^{0.6}\$yr^{-1}$

Table 3.4: Cost data for Example 3.2

Exchanger	1	2	3	4	5
Area (existing) (m^2)	137.8	83.2	79.5	194.2	104.6
New area I (m^2)	168.43	83.2	79.5	194.2	104.6
New area II (m^2)	137.8	83.2	79.5	237.8	133.7

Table 3.5: Heat Exchanger Areas for Example 3.2

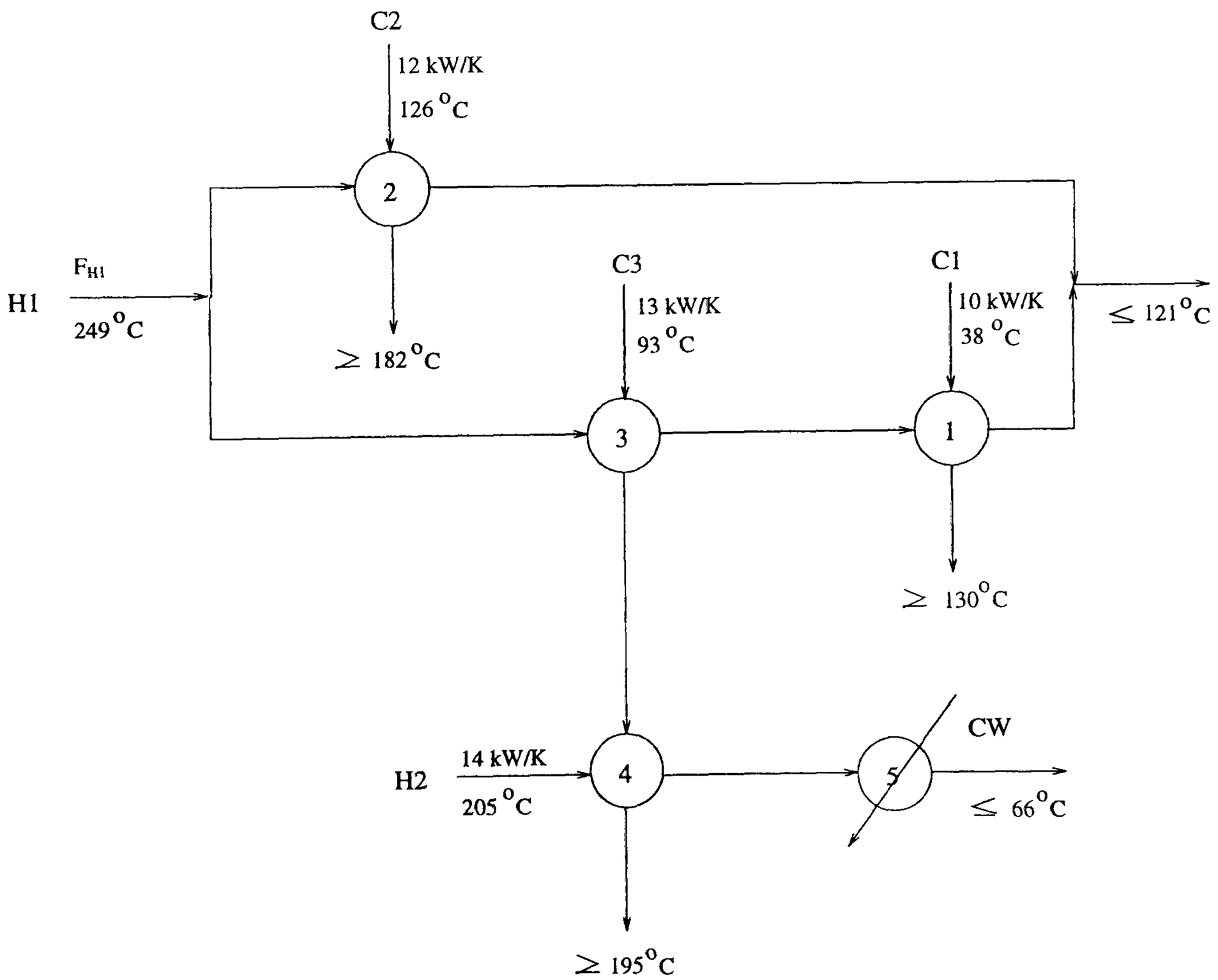

Figure 3.5: Existing network for Example 3.2

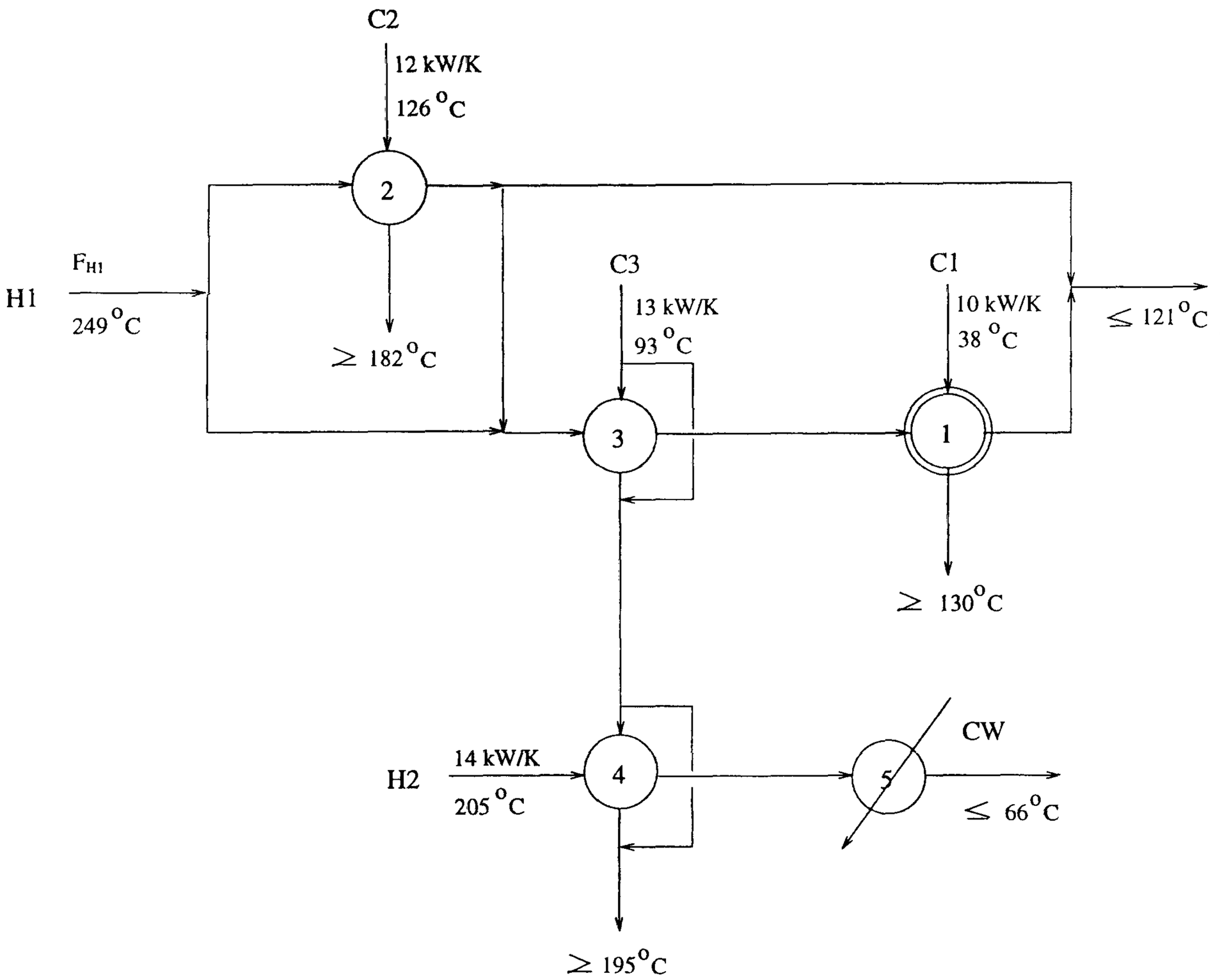

Figure 3.6: Proposed network (I) for Example 3.2

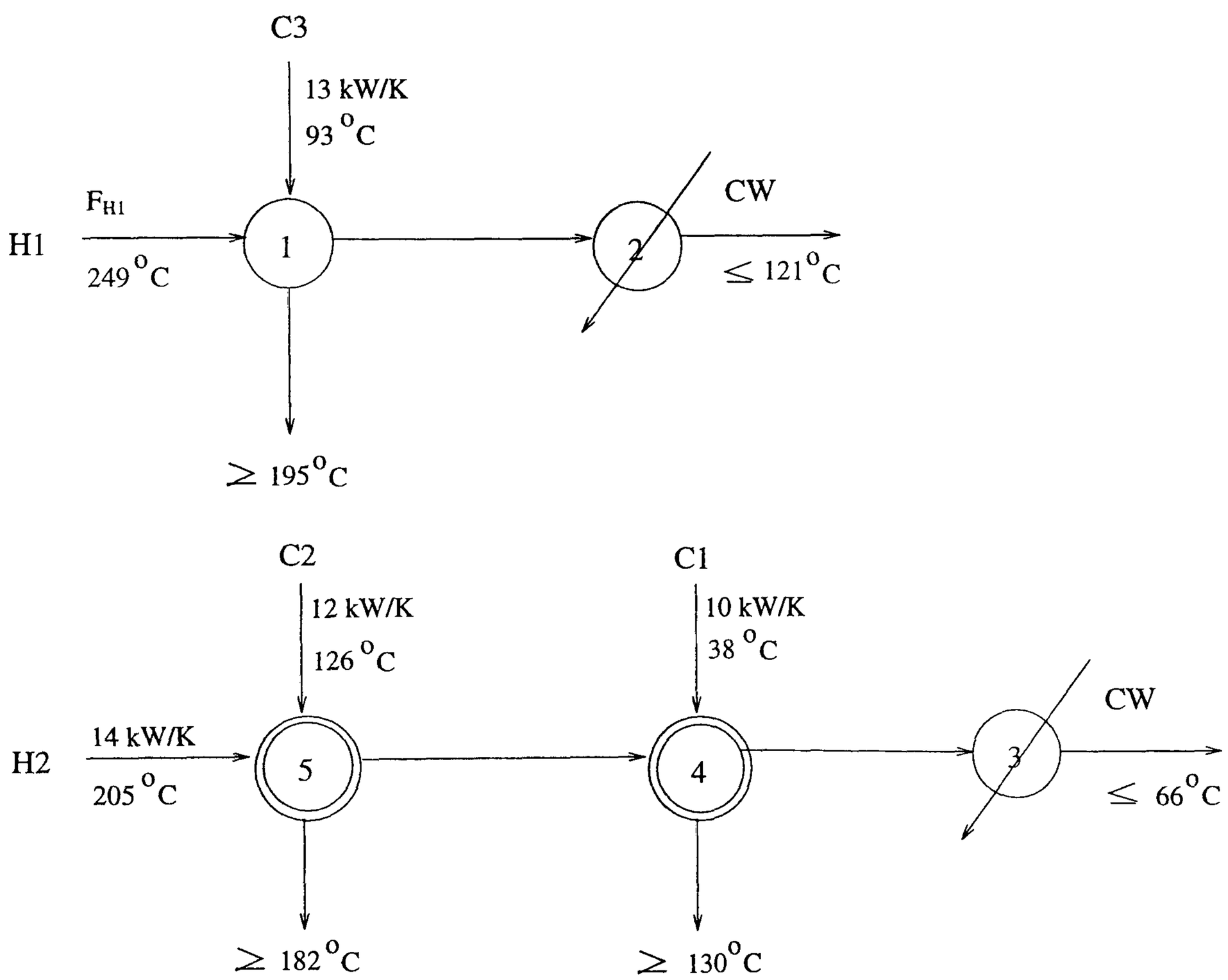

Figure 3.7: Proposed network (II) for Example 3.2 (when reassignment is not penalized)

Example 3.3

In order to compare the multiperiod retrofit model to the enhanced MINLP formulation with the explicit disturbance rejection criterion, consider the example problem 2.4 (10SP1 problem); the existing network is shown in Figure 3.8. In addition to the flowrate variations of H4 ($\pm 2\ kBtu/hr\ ^oF$) and temperature variations of C5 ($\pm 10^oF$ variations), the inlet temperature of C5 defines a disturbance input, (high frequency variations), the effect of which on the outlet temperature of H2 must be counteracted. In the flexible retrofitted network (see Figure 2.16) there is a downstream path from T^{in}_{C5} to T^{out}_{H2}, *i.e.* T^{out}_{H2} is disturbable from T^{in}_{C5}.

The multiperiod MINLP retrofit model for total disturbance rejection is developed for five periods of operation (nominal operating point and the operating conditions corresponding to the four vertices of the network uncertainty region). The model involves 5926 rows and 4392 variables, 97 of which are binary (fixed matches and piping layout for non-critical parts of the network). The final network is illustrated in Figure 3.9. It features a hot bypass at exchanger 10 (instead of a cold bypass at exchanger 6) and a total annualized retrofit cost of \$ 30006 yr^{-1} (slightly greater that the flexible but not structurally controllable solution). The network is flexible throughout the uncertainty region defined by F_{H4} and T^{in}_{C5}, whereas the bypass at exchanger 10 maybe exploited to counteract the effect of T^{in}_{C5} high frequency variations on the control objective T^{out}_{H2}. The proposed structure was obtained in 25 GBD iterations (starting from the existing network), consuming approximately 6450 CPU sec on a SPARC-10 workstation.

Example 3.4

Considering the fouling heat exchanger network of Figure 3.10, overdesign of exchanger 3 at a total annualized retrofit cost of \$ 26250 yr^{-1} was proved to suffice for the network feasible operation throughout U_{H1C1} deterioration.

Suppose that the outlet temperatures of H1 and C1 must be maintained at their set-points, while T^{in}_{H2} varies within a small range at high frequency (disturbance input). It is obvious that in the network structure of Figure 3.10 there are not any manipulated variables to counteract the effect of T^{in}_{H2} on T^{out}_{H1} and T^{out}_{C1}. The retrofit model for flexibility and total disturbance rejection is developed (2 periods of operation, corresponding to the extreme values of U_{H1C1}). Retrofit cost and operating cost data are given in Table 3.6.

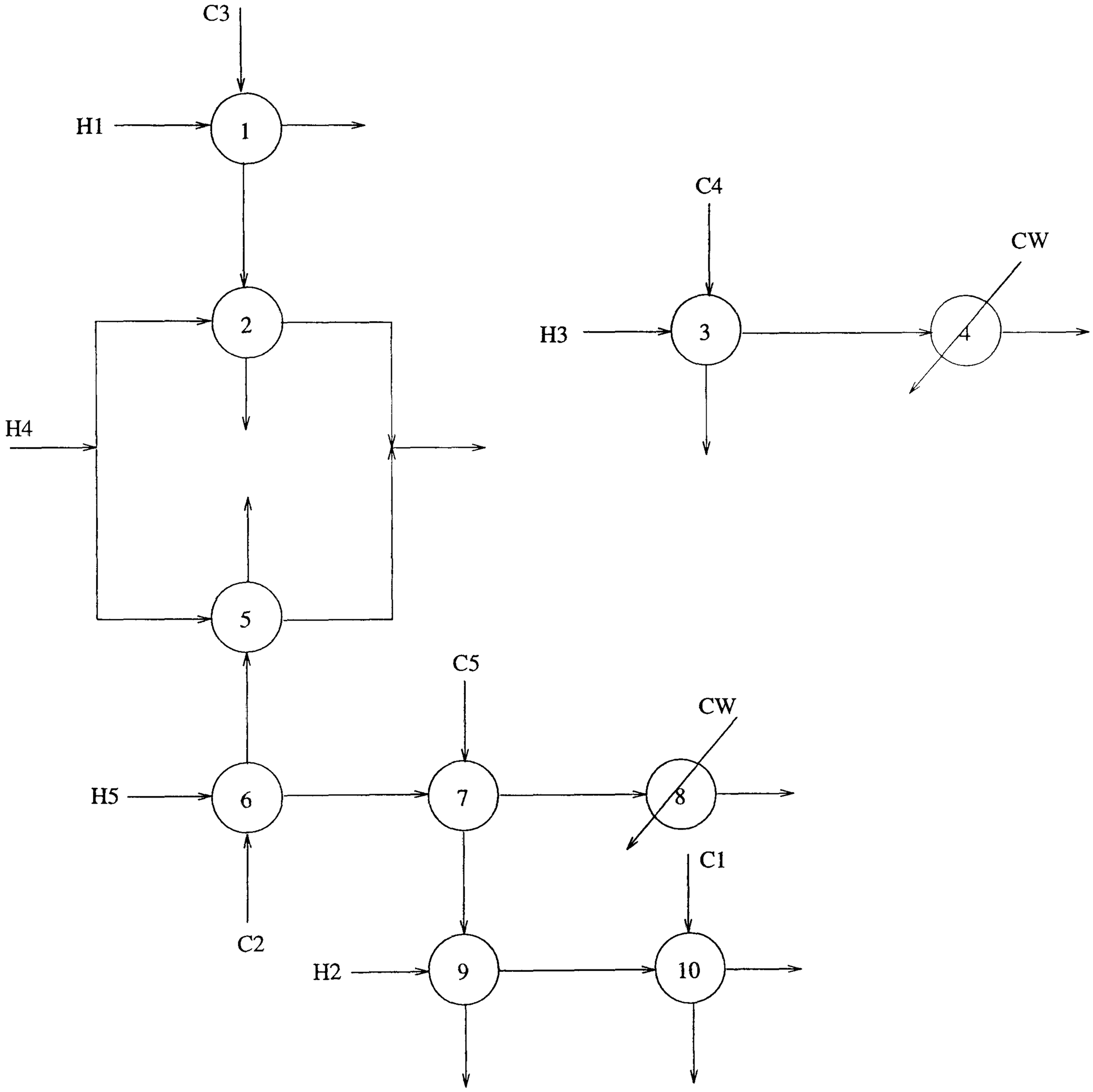

Figure 3.8: Existing Network for Example 3.3

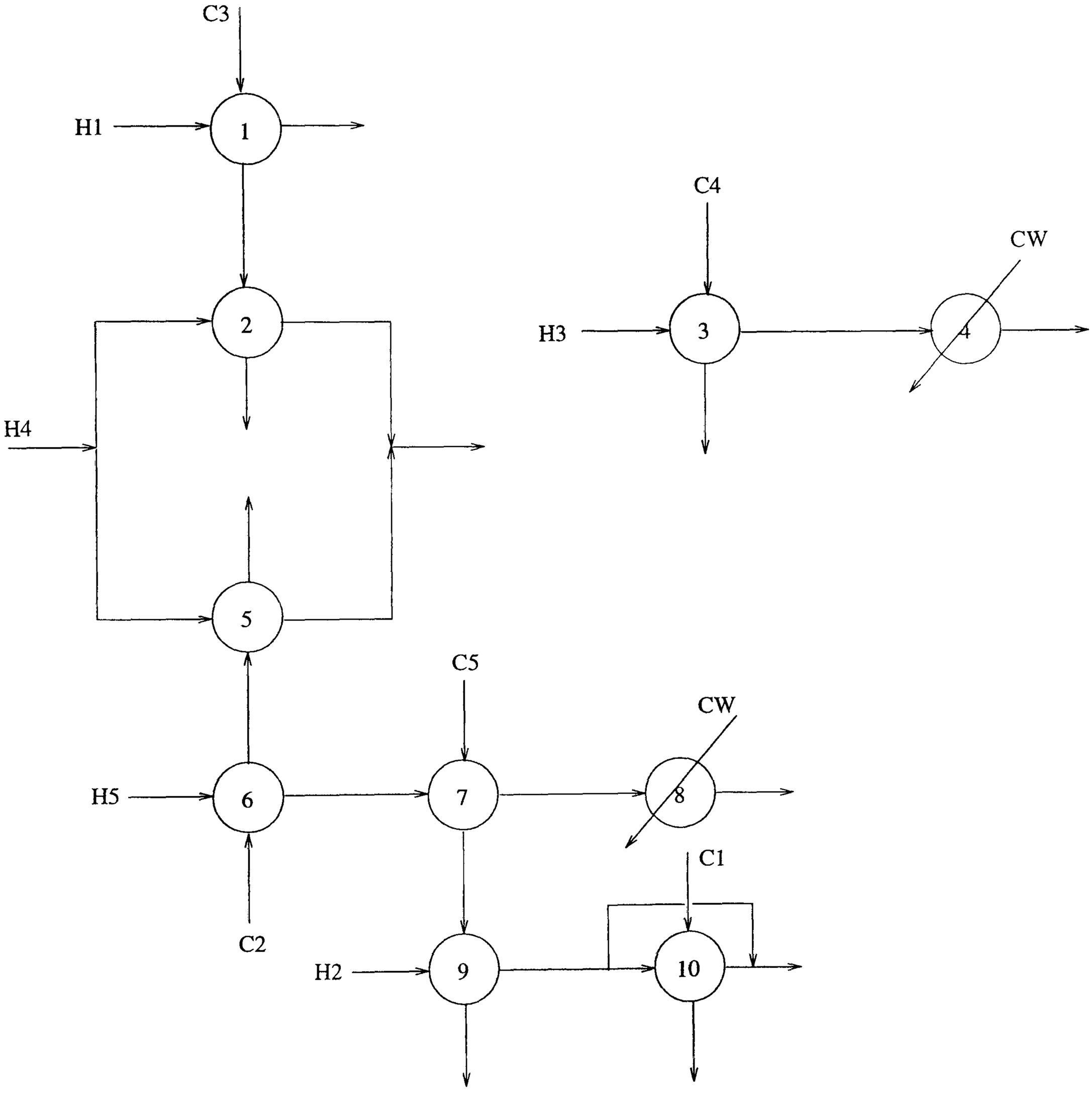

Figure 3.9: Retrofitted Network for Example 3.3

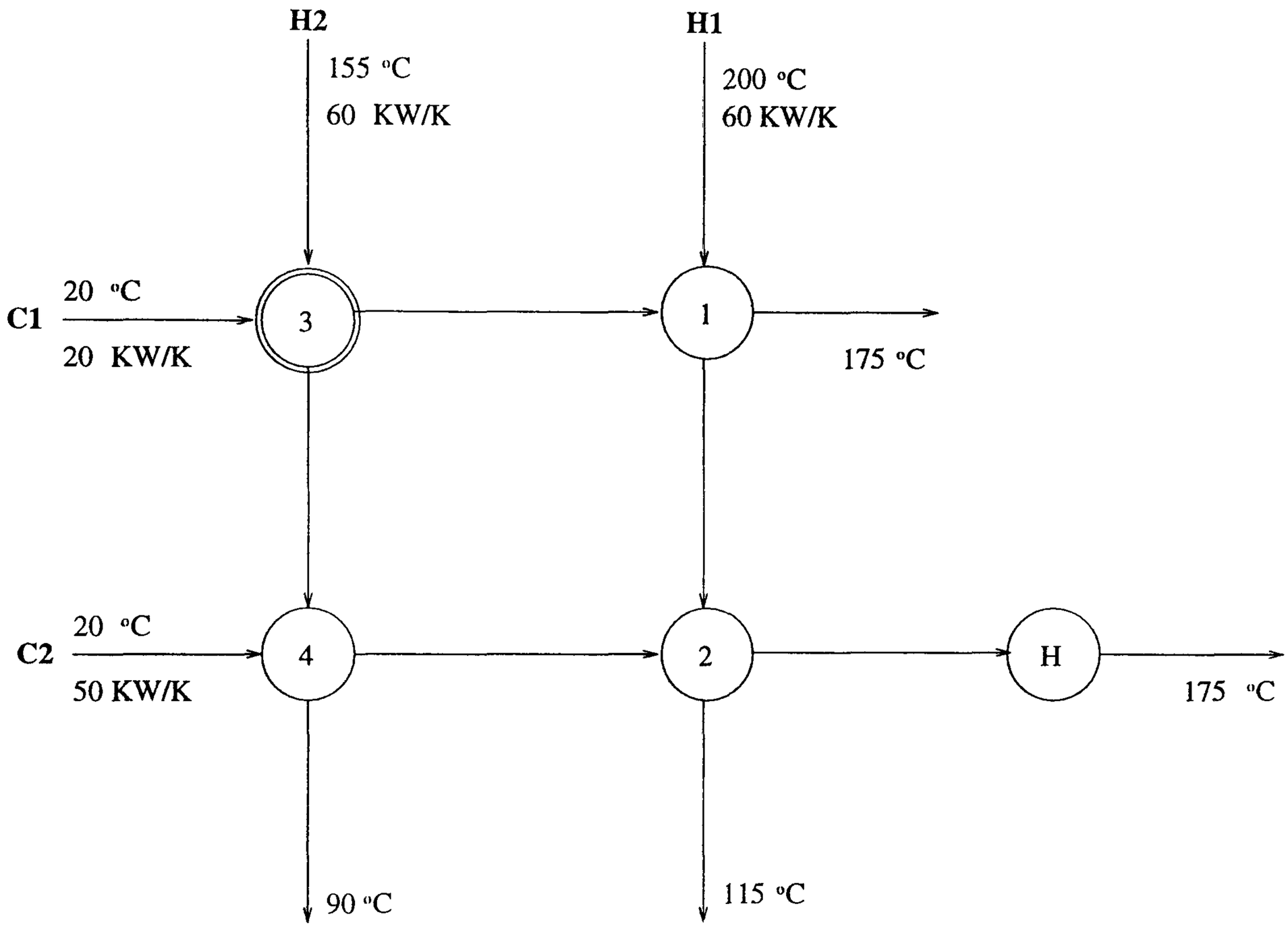

Figure 3.10: Flexible Network for Example 3.4

	Cost
Steam cost	$11.05\ \$KW^{-1}yr^{-1}$
Additional area cost	$350AA^{0.6}\ \$yr^{-1}$
Piping cost	$\$\ 10000\ yr^{-1}$

Table 3.6: Retrofit cost data for Example 3.4

One must note that in the retrofit for flexibility, exchanger area constraints were only posed as inequality constraints and exchanger bypasses were not required to exploit exchanger utilization and network interactions. Here, since structural features as exchanger bypasses play a key role in disturbance rejection, they are explicitly taken into account. Thus, they are considered in exchanger area utilization; moreover, design equations are incorporated, rather than area inequality constraints. Also, outlet stream temperatures are optimized within bounds rather than being fixed.

The retrofit model features 956 rows, 736 continuous variables and 165 binary variables. The model was solved in 10 GBD iterations (considering fixed matches), consuming approximately 130 CPU seconds on a SPARC-10 workstation. The retrofitted structure is illustrated in Figure 3.11. It features a hot bypass at exchanger 3 and an area increase on the same exchanger (not the fouling one) of 105.8 m^2. The network corresponds to a total annualized retrofit cost of \$ 23558 yr^{-1} and an average utility consumption of 1522 kW (with the outlet temperature of H2 dropping to 85^oC). Due to the hot bypass at exchanger 3, T_{H1}^{out} and T_{C1}^{out} are not disturbable from T_{H2}^{in}.

If we allow T_{H2}^{out} to drop to 72^oC, an average utility consumption of 763.6 kW can be achieved.

3.5 Control Structures in the Synthesis/Retrofit of HENs

The iterative strategy of Figure 3.2 results in heat exchanger networks, where flexibility and structural controllability requirements (total disturbance rejection) are satisfied, optimizing simultaneously operating and capital investment cost. However, structural controllability considerations may not reveal control potentials and control system design requirements; this may result in complex and economically unfavourable control configurations.

Consider for example the network of Figure 3.11, where the outlet temperatures of H1 and C1 must be maintained at their optimized values under the fouling of exchanger 1 and the disturbance variations of H2. The retrofit procedure of Figure 3.2 resulted in an area increase of exchanger 3 and a bypass placement on the hot side of exchanger 3. The outlet temperatures of H1 and C1 are not structurally disturbable from the inlet temperature of H2 and the network is fully flexible. However, in the network of Figure 3.11 there is only one potential manipulated variable, the split fraction at the hot splitter of exchanger 3. Although the outlet temperatures of interest are not structurally disturbable from T_{H2}^{in}, the question remains *what control structure to implement* and what would have been the impact on network economics is further controllability requirements had

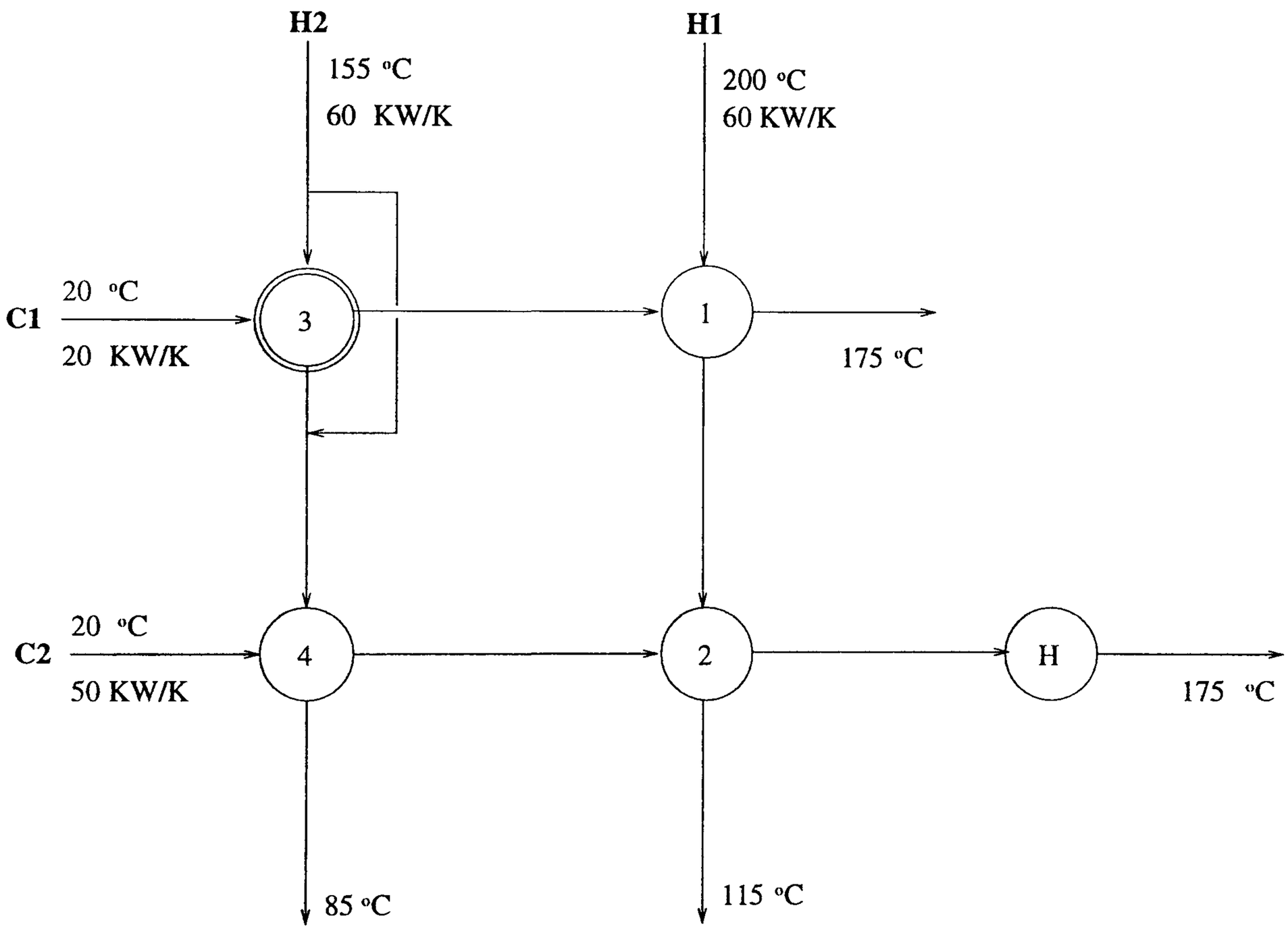

Figure 3.11: Retrofitted Network for Example 3.4

been considered during retrofit.

In the network of Figure 3.6 the control objectives T_{H1}^{out} and T_{C3}^{out} are also structurally undisturbable from the disturbance inputs T_{C1}^{in} and T_{C2}^{in}. Furthermore, there are sufficient manipulated variables to control both T_{H1}^{out} and T_{C3}^{out} (splitter after exchanger 2, cold bypasses at exchangers 3 and 4). However, the performance of any control system will be greatly affected by the structural closeness of manipulated inputs, disturbances and control objectives. The question arises *what would have been the impact on network structure if control considerations had been taken into account at the synthesis step.*

In the rest of Chapter 3 dynamic controllability aspects will be introduced at the synthesis and retrofit design of heat exchanger networks. A simple dynamic model will be employed to describe *the dynamic behaviour of the network hyperstructure at a variable operating point.* Simple controllability criteria will be formulated and introduced in the synthesis/retrofit model, based on time responses and gains.

The synthesis/retrofit problem stated in section 3.1 is now enhanced with a second objective, *to propose in the optimal network configuration a favourable control scheme.*

3.6 Hyperstructure Representation of Control Alternatives

The heat exchanger network hyperstructure representation for multiperiod operation (see Figures 2.4 and 2.5) represents *all structural alternatives* of the network. As utility consumption is not prespecified, neither are the stream flows and intermediate temperatures, such a representation includes *all operational alternatives* as well. It will be shown that *all control alternatives* are included within the considered hyperstructure and can be generated automatically for each embedded network structure.

Split fractions and utility loads are in general the potential manipulating variables in a heat exchanger network. The manipulating splitters can be located at the inlet of a stream (stream splitting and overall bypass), before an exchanger (exchanger bypasses) and at the outlet of a stream from an exchanger ("multibypasses"). For the selection of the control scheme, pairing binary variables are introduced for all the potential manipulating variables and the desired controlled variables (outlet or intermediate stream temperatures; *e.g.* the temperature of a cold stream after and if it exchanges heat with a hot stream). In particular, a pairing variable denotes that a

particular stream temperature is controlled through the *split fraction* of (i) a stream flow leaving the initial splitter of a stream (towards a heat exchanger or the final mixer of the stream), (ii) a bypass flow to an exchanger, (iii) a stream flow leaving the splitter of a stream after an exchanger (outlet flow or flow towards another exchanger) or a *utility load (hot or cold).* The complete set of pairing variables that is considered in the network hyperstructure, when only the outlet temperatures are of interest, is described in detail in Appendix E. The pairing variables are interconnected, so that for each controlled outlet temperature one manipulating variable is selected and each manipulating variable is assigned to at most one controlled output.

The selection of the control scheme depends on the actual network structure. Thus, a number of constraints are introduced to connect the pairing variables to the structural variables. The logic of these constraints is that:

- A split fraction cannot be selected to control a temperature if the corresponding flow does not exist in the network. The same holds for utility loads.
- For each splitter $n-1$ split fractions can be manipulated, where n is the number of the outlet flows of the splitter.

The complete set of constraints that connect the pairing scheme to the network hyperstructure is also described in detail in Appendix E.

Illustrative example

Consider for example the heat integration of the two hot streams H1 and H2 with the three cold streams C1, C2 and C3 of Example 3.2. Stream data and specifications are given in Table 3.2. Synthesis alternatives are explored here simultaneously with control schemes for T_{H1}^{out} and T_{C3}^{out}, that can efficiently counteract the effect of disturbance inputs. For presentational purposes, parameter variations at low frequencies that would require flexibility considerations are not examined, since dynamic aspects are of interest. However, any parameter uncertainty can be addressed through the iterative synthesis framework of Figure 3.2. Furthermore, the considered synthesis alternatives will be restricted to fixed stream matches, as they have been predicted from the optimization of the total network cost at the nominal case (network of Figure 3.12, featuring a total annualized

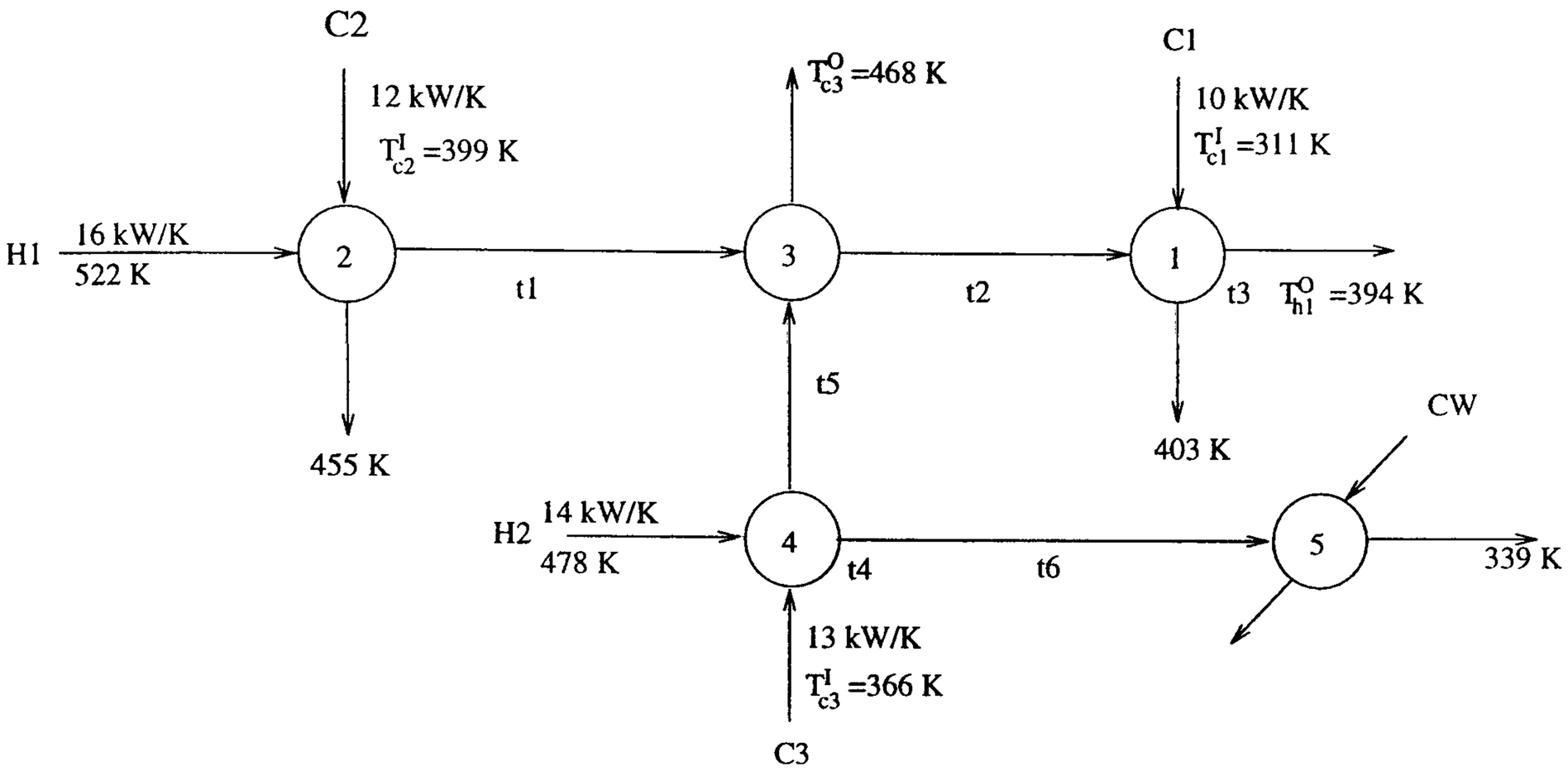

Exchanger	1	2	3	4	5
Area (m^2)	131.33	41	176.75	122.3	100.6

Figure 3.12: Minimum TAC network for working example

cost of \$ 120268 yr^{-1}); H2 is also restricted to the structural layout of Figure 3.12 (entering first exchanger 4 and then cooler 5).

For this considered superstructure the potential manipulated variables are (see Table 3.7):

- Initial splitter of $H1$: Split fractions of $H1$-flows towards the exchangers $1, 2, 3$ and the overall bypass of $H1$, $s^{I,H1}_{C1}$,$s^{I,H1}_{C2}$,$s^{I,H1}_{C3}$, $s^{S,H1}$, respectively.
- Initial splitter of $C3$: Split fractions of $C3$-flows towards the exchangers $3, 4$ and the overall bypass of $C3$, $s^{I,C3}_{H1}$, $s^{I,C3}_{H2}$ and $s^{S,C3}$, respectively.
- Splitter prior to exchangers: Hot and cold bypass streams in exchangers $1, 2, 3, 4$, s^{HE}_{H1C1}, s^{CE}_{H1C1}, s^{HE}_{H1C2}, s^{CE}_{H1C2}, s^{HE}_{H1C3}, s^{CE}_{H1C3}, s^{HE}_{H2C3} and s^{CE}_{H2C3}.
- Splitter of $H1$ after exchangers $1, 2, 3$: Split fractions of the outlet flows of $H1$ (from each exchanger to its final mixer) and flows to the other exchangers of $H1$, $s^{O,H1}_{C1}$, $s^{B,H1}_{C2C1}$, $s^{B,H1}_{C3C1}$, $s^{O,H1}_{C2}$, $s^{B,H1}_{C1C2}$, $s^{B,H1}_{C3C2}$, $s^{O,H1}_{C3}$, $s^{B,H1}_{C2C3}$, $s^{B,H1}_{C1C3}$.
- Splitters of $C3$ after exchangers $3, 4$: Split fractions of the outlet flows of $C3$ and flows to the other exchanger of $C3$, $s^{O,C3}_{H1}$, $s^{B,C3}_{H2H1}$, $s^{O,C3}_{H2}$ and $s^{B,C3}_{H1H2}$.

The control scheme selection in this example involves 58 pairing binary variables. These variables are connected to the 29 (in number) structural variables of the network, denoting the existence of the stream flows.

3.7 Variable Time Delay Matrix

Dynamics are investigated through time delays in the network. A variable delay matrix is developed, where the time response of an output to an input is given as a function of the network structure and design parameters to be determined, as stream flows, exchanger areas, pipe characteristics etc. To each hyperstructure element, a dead time can be associated as a function of stream flows, areas, hold-ups etc. The actual time delay contribution of each element depends on the network operating point, which, even when the structure is known, is to be optimized on a TAC (Total Annualized Cost) basis. However, the network paths that determine the response of an output to an input (disturbance or manipulating) can be easily identified when the structure is known and consequently can be expressed as a function of the network structural variables.

When the network structure is specified, the time-response paths of an output to an input can be determined through the solution of LP-shortest paths problems. The network in this case is represented by a directed graph with variable vertices (splitters, mixers, exchanger units) and arcs (see Figure 3.13). The existence of each piping segment and vertex in the directed graph is represented by a corresponding set of hyperstructure structural variables; *i.e.* inlet pipes of hot streams (*hi* in Figure 3.13) are represented by w^h (see Figure 2.5), bypass pipes of hot streams (h_b in Figure 3.13) by x^h, etc.

To account for the dead time of an exchanger, each exchanger unit is represented by a set of arcs and vertices as shown in Figure 3.13. The dead time that corresponds to the hot side of the exchanger is associated with the arcs *hea* and *heb*, whereas the dead time for the cold side is associated with the arcs *cea* and *ceb*. Exchanger wall can be represented by the arc *e*. When a lumped parameter model is employed to describe the exchanger behaviour (Mathisen *et al.*, 1993) the set of arcs *hea*, *heb*, *cea*, *ceb* and *e* can be considered for each cell.

The vertices of interest, when time responses are considered, are the initial splitter of each stream (where the disturbance inputs enter the network), the splitters of the hyperstructure (where the manipulating split fractions are located), the utility exchangers and the final mixers of the

Man. input / Cont. output	$s_{C1}^{I,H1}$	$s_{C2}^{I,H1}$	$s_{C3}^{I,H1}$	$s^{S,H1}$	$s_{H1}^{I,C3}$	$s_{H2}^{I,C3}$	$s^{S,C3}$
T_{H1}^{out}	$mh_{C1}^{I,H1}$	$mh_{C2}^{I,H1}$	$mh_{C3}^{I,H1}$	$mh^{S,H1}$	$mh_{H1}^{I,C3}$	$mh_{H2}^{I,C3}$	$mh^{S,C3}$
T_{C3}^{out}	$mc_{C1}^{I,H1}$	$mc_{C2}^{I,H1}$	$mc_{C3}^{I,H1}$	$mc^{S,H1}$	$mc_{H1}^{I,C3}$	$mc_{H2}^{I,C3}$	$mc^{S,C3}$

	s_{H1C1}^{HE}	s_{H1C1}^{CE}	s_{H1C2}^{HE}	s_{H1C2}^{CE}	s_{H1C3}^{HE}	s_{H1C3}^{CE}	s_{H2C3}^{HE}
T_{H1}^{out}	mh_{H1C1}^{HE}	mh_{H1C1}^{CE}	mh_{H1C2}^{HE}	mh_{H1C2}^{CE}	mh_{H1C3}^{HE}	mh_{H1C3}^{CE}	mh_{H2C3}^{HE}
T_{C3}^{out}	mc_{H1C1}^{HE}	mc_{H1C1}^{CE}	mc_{H1C2}^{HE}	mc_{H1C2}^{CE}	mc_{H1C3}^{HE}	mc_{H1C3}^{CE}	mc_{H2C3}^{HE}

	s_{H2C3}^{CE}	$s_{C1}^{O,H1}$	$s_{C2C1}^{B,H1}$	$s_{C3C1}^{B,H1}$	$s_{C2}^{O,H1}$	$s_{C1C2}^{B,H1}$	$s_{C3C2}^{B,H1}$
T_{H1}^{out}	mh_{H2C3}^{CE}	$mh_{C1}^{O,H1}$	$mh_{C2C1}^{B,H1}$	$mh_{C3C1}^{B,H1}$	$mh_{C2}^{O,H1}$	$mh_{C1C2}^{B,H1}$	$mh_{C3C2}^{B,H1}$
T_{C3}^{out}	mc_{H2C3}^{CE}	$mc_{C1}^{O,H1}$	$mc_{C2C1}^{B,H1}$	$mc_{C3C1}^{B,H1}$	$mc_{C2}^{O,H1}$	$mc_{C1C2}^{B,H1}$	$mc_{C3C2}^{B,H1}$

	$s_{C3}^{O,H1}$	$s_{C1C3}^{B,H1}$	$s_{C2C3}^{B,H1}$	$s_{H1}^{O,C3}$	$s_{H2H1}^{B,C3}$	$s_{H2}^{O,C3}$	$s_{H1H2}^{B,C3}$
T_{H1}^{out}	$mh_{C3}^{O,H1}$	$mh_{C1C3}^{B,H1}$	$mh_{C2C3}^{B,H1}$	$mh_{H1}^{O,C3}$	$mh_{H2H1}^{B,C3}$	$mh_{H2}^{O,C3}$	$mh_{H1H2}^{B,C3}$
T_{C3}^{out}	$mc_{C3}^{O,H1}$	$mc_{C1C3}^{B,H1}$	$mc_{C2C3}^{B,H1}$	$mc_{H1}^{O,C3}$	$mc_{H2H1}^{B,C3}$	$mc_{H2}^{O,C3}$	$mc_{H1H2}^{B,C3}$

Table 3.7: Control alternatives for the illustrative example

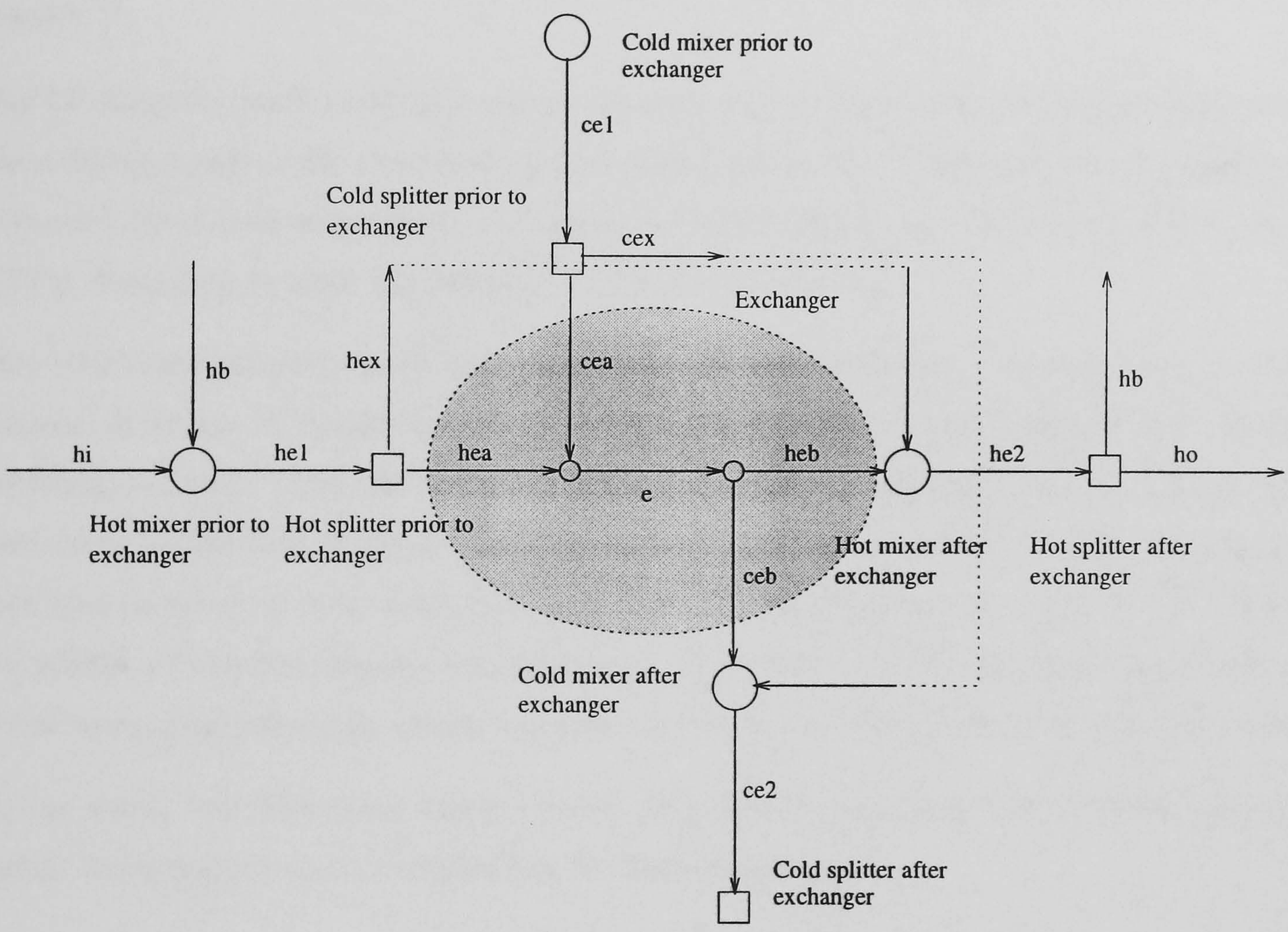

Figure 3.13: Time-delay graph/network representation

streams (outlet temperatures). When the control objective is an intermediate temperature, the previous mixer of the stream (in the general hyperstructure representation) is also considered.

An estimation of the dead time of each network element (based on the operating point which results from total cost optimization without controllability considerations, for each set of structural variables, during the iterations in the MINLP synthesis/retrofit problem) is associated to the corresponding arc of the network-directed graph. The actual LP-shortest path formulations to determine the time-response paths of the considered outputs to the inputs of interest are described in Appendix F.

The LP-shortest path problem is solved for each pair of input-output vertices that are considered when fixing temporarily the network and control structure. When all the propagation paths are of interest, the LP-shortest path problem is solved iteratively for each input-output pair, until infeasibility, bounding in each iteration the fastest time response.

After the response paths have been identified, the time response of an output to an input can be expressed in terms of stream flowrates and design variables of the network to be determined (*e.g.* exchanger areas). Thus, the delay matrix for the current network and control structure will be expressed as a function of the network operating point. Controllability requirements can then be formulated in terms of time delays (for the current network structure and control scheme) and included within a Primal synthesis/ retrofit model. The solution of the synthesis model will provide an optimal operating point and design parameters which will *satisfy the controllability criteria.*

In this work, two time-delay based criteria will be used, based on the shortest time response of an outlet temperature to a manipulating or disturbance input:

Dynamic decoupling: The off-diagonal elements of the delay matrix, when the manipulating variables are considered, should be greater than the diagonal elements.

$$t_{ij} - t_{ij\prime} - (1 - m_{ij})\mathrm{M} + \alpha \leq 0 \qquad \forall i, j, j\prime$$

where t is time response, i is a control objective, j,$j\prime$ manipulating variables, m_{ij} the pairing variable that defines the control of i through j, M is a large positive number and α a positive variable which is maximized.

When the control pair ij is selected ($m_{ij} = 1$) the criterion is activated and the time response of i to the manipulating input j must be as small as possible compared to the time response

to any other manipulating input j'. This is achieved through the maximization of α which is considered in the objective function with a (large) negative coefficient. M is properly selected so that $\mathrm{M} > \alpha^u$ (where α^u is a valid upper bound of α) and when $m_{ij} = 0$ the criterion to be a redundant constraint, even when α is maximized.

Time effective control: The time response of a control objective to the corresponding manipulating input should be less than the time response to the network disturbances.

$$t_{ij} - t_{ik} - (1 - m_{ij})\mathrm{M} + \alpha \leq 0 \quad \forall i, j, k$$

where i is a control objective, j manipulating variable, k disturbance input, m_{ij} the pairing variable that defines the control of i through j, M is a large positive number and α a positive variable which is maximized. M is selected as described above.

When the pair ij is selected, the above criterion is activated and the time response of the output i to the selected manipulating input should be less than the time response to *all* the disturbance inputs. This criterion is realistic only in the case of feedforward control. Nevertheless, quick response of a controlled output to the corresponding manipulating input, in relation to the response to disturbances, is a desired feature of a control structure. The relative importance of such a criterion can be manipulated through the weighting factor in the maximization of α.

On the synthesis example...

Consider as potential network structure the one illustrated in Figure 3.14. The cost optimal areas and stream flows are the same with the network in Figure 3.12. A potential pairing scheme is when the hot bypass of $H2$ in exchanger 4 is used to control the outlet temperature of $C3$ and the hot bypass of $H1$ in exchanger 1 to control the outlet temperature of $H1$.

When the disturbance T_{C1}^{in} is concerned only T_{H1}^{out} is disturbable. The shortest path, in terms of time response, is defined by the inlet pipe of $C1$ to exchanger 1, the exchanger 1 itself (hot and cold side) and the outlet pipe of $H1$. Assuming a holdup $\tau = 1\ (kW/K)^{-1}sec^{-1}$ for all pipes and a pipe time delay proportional to the stream flow (see Appendix F), the shortest time response of T_{H1}^{out} to the T_{C1}^{in} is found (see Appendix F) $t_{C1}^{H1} = 103.781\ sec.$

Similarly the shortest path, in terms of time response, from T_{C2}^{in} to T_{H1}^{out} is defined by the inlet pipe of $C2$ to exchanger 2, exchanger 2 (hot and cold side), the bypass stream of $H1$ from exchanger

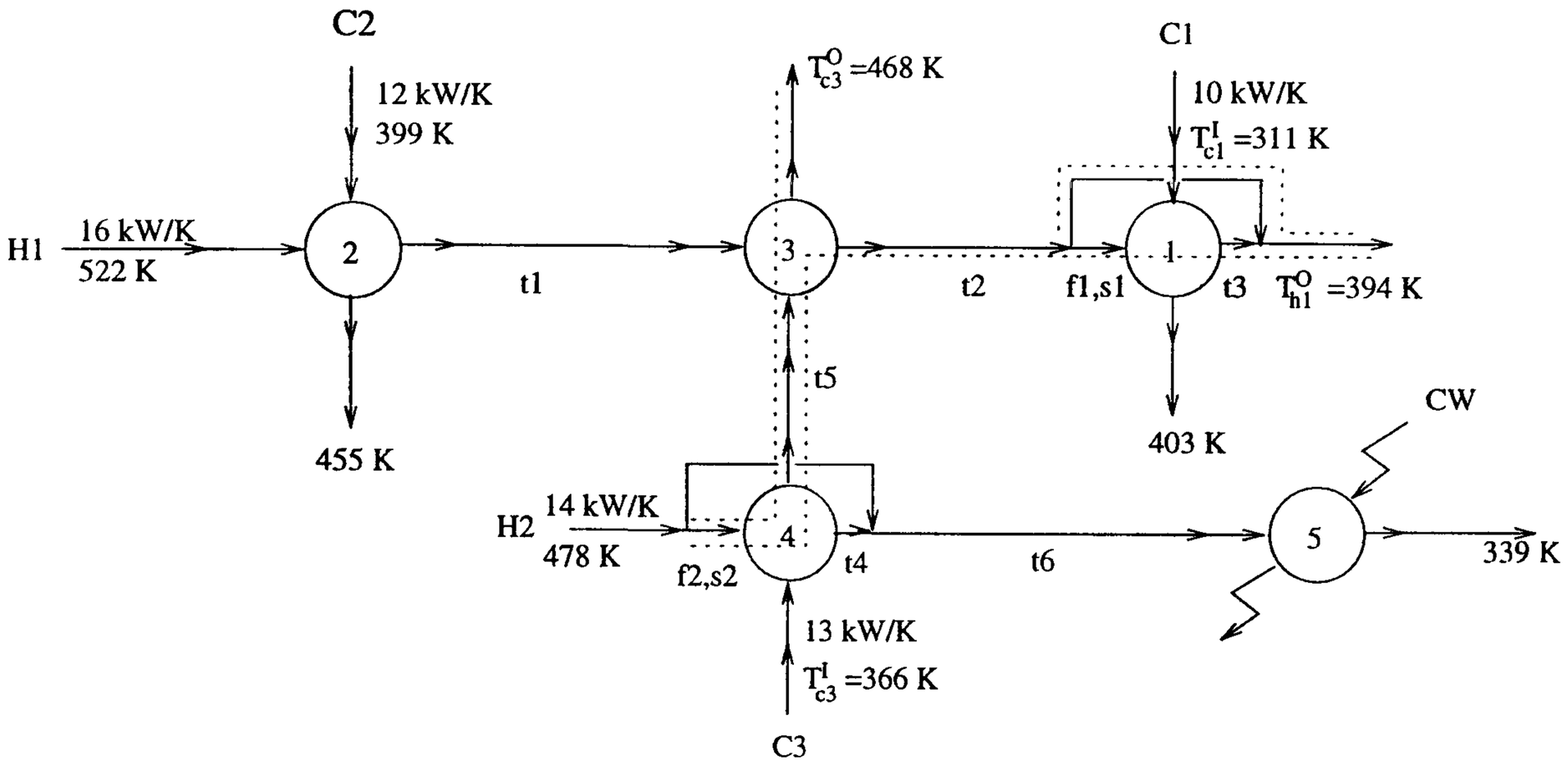

Figure 3.14: Potential network structure and control scheme

Input / Output	T^{in}_{C1}	T^{in}_{C2}	s^{HE}_{H1C1}	s^{HE}_{H2C3}
T^{out}_{H1}	103.781	285.244	48	226.93
T^{out}_{C3}	∞	189.143	∞	130.788

Table 3.8: Fastest time response of controlled outputs in proposed structure of Figure 3.13

2 to exchanger 3, exchanger 3 itself, the bypass of $H1$ from exchanger 3 to exchanger 1, exchanger 1 and the outlet pipe of $H1$. These network elements result in a time response $t^{H1}_{C2} = 285.284\ sec.$

In the same way, for the structure and the control scheme of Figure 3.14 the time responses of Table 3.8 result. Based on the time-response criteria, described above, the proposed control scheme is acceptable.

Analytical calculation of the gains of the controlled outputs with respect to the selected manipulating inputs in the network of Figure 3.14 results in the gain matrix of Table 3.9.

One can note that the hot bypass in exchanger 4, chosen to control T^{out}_{C3}, has a strong gain effect on T^{out}_{H1}. This implies that the network and control scheme of Figure 3.14 may not be preferable when minimal interactions are of interest, as will be discussed in the next section.

Input / Output	s^{HE}_{H1C1}	s^{HE}_{H2C3}
T^{out}_{H1}	11.392	-6.627
T^{out}_{C3}	0	-4.665

Table 3.9: Gain matrix for proposed control scheme in network of Figure 3.13

3.8 Variable Gain Matrix

A generalized dynamic model for a heat exchanger network is utilized (Groep, 1993) in this work to derive the gain matrix of the controlled outputs with respect to the potential manipulating inputs. This dynamic model consists of modules that describe the dynamic behaviour of the network elements, linearized at a steady-state operating point, *to be determined* through the optimization of the network synthesis or retrofit cost.

The elements of HEN that determine its dynamic behaviour are the heat exchangers, splitters, mixers and pipes. To account for the effects on the dynamics of the heat exchanger network, a linearized transfer function has been developed, where the input to each network element is assumed to consist of a steady state component plus a dynamically varying component imposed on this. Steady state inputs and outputs are evaluated through the steady state model included in the synthesis model (Appendix B). The steady state parameters are used to construct a linearized model that describes the relation between dynamic input signal variations and the corresponding dynamic output signal variations. The analytical linearized models for the network elements are described in detail in Appendix F.

Within the hyperstructure network representation the linearized models are developed for each potential network element. Elements are connected through output to input assignments, where signal addition points for the heat capacity streams are implemented by introducing the mixer as a linearized elementary model. Thus, a generalized linearized dynamic model is developed for the heat exchanger network hyperstructure and a variable transfer function is introduced, where the outputs are the stream outlet temperatures and the inputs are potential manipulating variables (split fractions of the several hyperstructure splitters and utility loads).

The variable transfer function is connected to the structural variables (defining the network topology) and the steady state operating and design parameters (areas, stream flows, tempera-

tures), that are variables to be optimized. When a hyperstructure element (splitter, exchanger, mixer, pipe) does not exist in the network (corresponding structural variable is zero), then the corresponding steady state and dynamic variations of related inputs and/or outputs due to this element are forced to zero, through logical constraints of the type:

$$-(structural\ variable)\mathbf{U} \leq (variation) \leq (structural\ variable)\mathbf{U}$$

where U is a large positive number.

When an input s_i is selected as manipulating (*i.e.* to control k control objective), an input variation $\hat{s}_i$ is imposed whereas all other inputs are forced to be constant:

$$-\hat{s}_i - (1 - \sum_{k;\text{control obj.}} m_{ik})\mathbf{U} + \epsilon \leq 0$$

$$-\sum_{k;\text{control obj.}} m_{ik}\mathbf{U} \leq \hat{s}_i \leq \sum_{k;\text{control obj.}} m_{ik}\mathbf{U}$$

Thus, when a path exists from the manipulating input under consideration to a controlled output (and this is determined through an LP-shortest path problem) the gain g_{ik} of the output is evaluated:

$$(gain)_{ik} = \begin{cases} 0 & if\ (path)_{ik} = 0 \\ \frac{\hat{s}_k}{\hat{s}_i} & if\ (path)_{ik} \neq 0 \end{cases}$$

A variable gain matrix is derived in this manner for each potential control scheme, where the gains are included explicitly within the MINLP synthesis or retrofit model as a function of the network structure and the design and operating parameters, which are to be optimized.

The selection of a favourable control scheme is driven by **minimal interactions**. For a potential control scheme, $(i,j) \in \mathbf{CM} = \{(i,j);\ i$ is manipulating input, j is controlled output and $m_{ij} = 1\}$ to be selected the following criteria are explicitly included within the synthesis model:

$$\mid gain_{kj} \mid - \mid gain_{ij} \mid -(1 - m_{ij})\mathbf{U} + \alpha\prime \leq 0 \quad \forall\ manipulating\ k \neq i$$

In the above constraint, U is a large positive number and $\alpha\prime$ a positive variable to be maximized. When the pair (i,j) is selected ($m_{ij} = 1$) then the criterion becomes active and the absolute

value of $gain_{ij}$ must be greater than the absolute value of the gain of output j to any other considered manipulating input k. Otherwise ($m_{ij} = 0$) the criterion is redundant.

On the synthesis example...

Consider the network structure in Figure 3.14 and the proposed control scheme $m_{T_{H1}^{out},s1} = 1$, $m_{T_{C3}^{out},s2} = 1$, where s1 and s2 are the split fractions at the splitters prior to exchangers 1 and 4 respectively. Since there is no path from s1 to T_{C3}^{out}, $g_{T_{C3}^{out},s3} = 0$. Considering the gain effect of s1 to T_{H1}^{out}:

$$\begin{aligned}
\hat{s1}^1 &\geq 0.01 \\
\hat{s2}^1 &= 0 \\
\hat{f1}^1 &= \hat{s1}^1 F_{H1} \\
\hat{t3}^1 &= \frac{2A_1U_1F_{C1}(2F_{C1}+A_1U_1)(t2-T_{C1}^I)}{(2F_{H1}F_{C1}+A_1U_1(F_{H1}+F_{C1}))^2}\hat{f1}^1 \\
\hat{T_{H1}^{out}}^1 &= \frac{f1}{F_{H1}}\hat{t3}^1 + \frac{(t3-T_{H1}^{out})}{F_{H1}}\hat{f1}^1 - \frac{(t2-T_{H1}^{out})}{F_{H1}}\hat{f1}^1 \\
g_{T_{H1}^{out},s1} &= \frac{\hat{T_{H1}^{out}}^1}{\hat{s1}^1}
\end{aligned}$$

where A_1, U_1 are the area and heat transfer coefficient in exchanger 1 and $\hat{x}^1$ in general is the variation of variable x due to input signal $\hat{s1}^1$. The above equations, as well as similar equations for the evaluation of the gains of T_{H1}^O and T_{C3}^O with respect to $s2$ are included in the synthesis model. From the gain matrix in Table 3.9 one can easily see that the criterion:

$$| g_{T_{H1}^O,s2} | - | g_{T_{C3}^O,s2} | \leq 0$$

cannot be satisfied. Thus, the network structure of Figure 3.14 and the aforementioned control scheme would lead to an infeasible synthesis subproblem and would be effectively rejected.

3.9 HEN Synthesis and Retrofit Design with Controllability Requirements

The hyperstructure synthesis/retrofit model (Appendix B) can be extended to include the variable time delay matrix and the variable gain matrix, which are explicitly expressed as functions of the

network structural variables, design variables and operating parameters. Explicit pairing criteria based on the time delay matrix and the gain matrix can be included within the MINLP model. For the solution of the resulting MINLP synthesis and/or retrofit model a modified Generalized Benders Decomposition is applied. In particular the following procedure is followed (see Figures 3.15 and 3.16):

Step 0: Select an initial network and control structure; *i.e.* a vector ($\mathbf{y}^i$, $\mathbf{w}^i$, $\mathbf{z}^i$, $\mathbf{a}^i$, $\mathbf{x}^i$, $\mathbf{b}^i$, $\mathbf{m}^i$) for the case of synthesis or ($\mathbf{y}^i$, $\mathbf{w}^i$, $\mathbf{z}^i$, $\mathbf{a}^i$, $\mathbf{x}^i$, $\mathbf{b}^i$, $\mathbf{d}^i$, $\mathbf{v}^i$, $\mathbf{n}^i$, $\mathbf{m}^i$) for the case of retrofit design. Set $k = 0$.

Step 1: Solve the minimum total (synthesis/retrofit) cost Primal subproblem **(PF)** of **(PC″)** (see Appendix B), without controllability considerations for the current vector ($\mathbf{y}^k$, $\mathbf{w}^k$, $\mathbf{z}^k$, $\mathbf{a}^k$, $\mathbf{x}^k$, $\mathbf{b}^k$, $\mathbf{m}^k$) or ($\mathbf{y}^k$, $\mathbf{w}^k$, $\mathbf{z}^k$, $\mathbf{a}^k$, $\mathbf{x}^k$, $\mathbf{b}^k$, $\mathbf{d}^k$, $\mathbf{v}^k$, $\mathbf{n}^k$, $\mathbf{m}^k$).

a. If the Primal subproblem is feasible, based on the cost optimal network flows estimate the dead times of the network pipes and exchanger units (employing a *lumped, distributed or other dynamic* model). Go to step 2.

b. If the Primal subproblem is infeasible set the shortest path of the disturbance inputs to the controlled outputs to zero and of the manipulating variables (to the outputs) to infinity. Go to step 4b.

Step 2: For the disturbance inputs and the currently selected manipulating variables solve the LP-shortest path problems, which involve the structural variables and mixed integer constraints that connect the network structure to network paths (see Appendix F), to determine the paths that correspond to the fastest response of the controlled outputs to these inputs. The LP-shortest path problem can be solved sequentially for each pair of input-output variables, to determine all the response paths.

a. If such an LP is infeasible, there is no path between the considered input and output. Set the corresponding time response equal to infinity.

b. Otherwise, obtain analytical expressions for the time responses, fixing the values of the variables that correspond to the existence of an arc in the path (see Appendix F).

Step 3: Postulate controllability criteria based on the current delay and gain matrices and include them within the primal synthesis or retrofit problem. Here, the aforementioned criteria of dynamic decoupling, time effective control and minimal interactions are used.

Exchanger	1	2	3	4	5
Area (m^2)	131.33	41	176.75	122.3	100.6

Table 3.10: Areas of proposed network

Step 4: Solve the Primal synthesis or retrofit problem **(PT)**, including the controllability requirements.

a. If **PT** is feasible, the solution is a valid upper bound to the solution of the original problem. If this is less than the current upper bound, update this upper bound. Based on the information on the Lagrangian multipliers of the mixed integer constraints, connecting the delay matrix and the transfer function to the structure and the pairing criteria to the control scheme, construct the Lagrangian function for the Master problem.

b. Otherwise, solve the relaxed Primal subproblem and construct a relaxed Lagrangian cut to include in the Master problem.

The described solution procedure refers only to the synthesis/retrofit design model when controllability is investigated through the selection of favourable control structures. The decomposition procedure and iterative scheme of Figure 3.15 correspond to the multiperiod MINLP synthesis/retrofit block of the iterative framework for operability of Figure 3.2.

3.10 Examples on Synthesis/Retrofit with Controllability Criteria

Example 3.5

The proposed synthesis framework with controllability considerations was applied to the small HEN of the illustrative example. The optimal network (obtained in 10 GBD iterations) is shown in Figure 3.17. It features a total annualized cost of $TAC = \$\ 248268\ yr^{-1}$. The splitter prior to exchanger 1 is manipulating to control T_{H1}^{out}, whereas the splitter prior to exchanger 3 is manipulating to control T_{C3}^{out}. The areas, time responses and gain matrix of the proposed network and control scheme are shown in Tables 3.10, 3.11 and 3.12 respectively. As one can note, although the heat exchanger areas remain the same the selected manipulating bypasses are different.

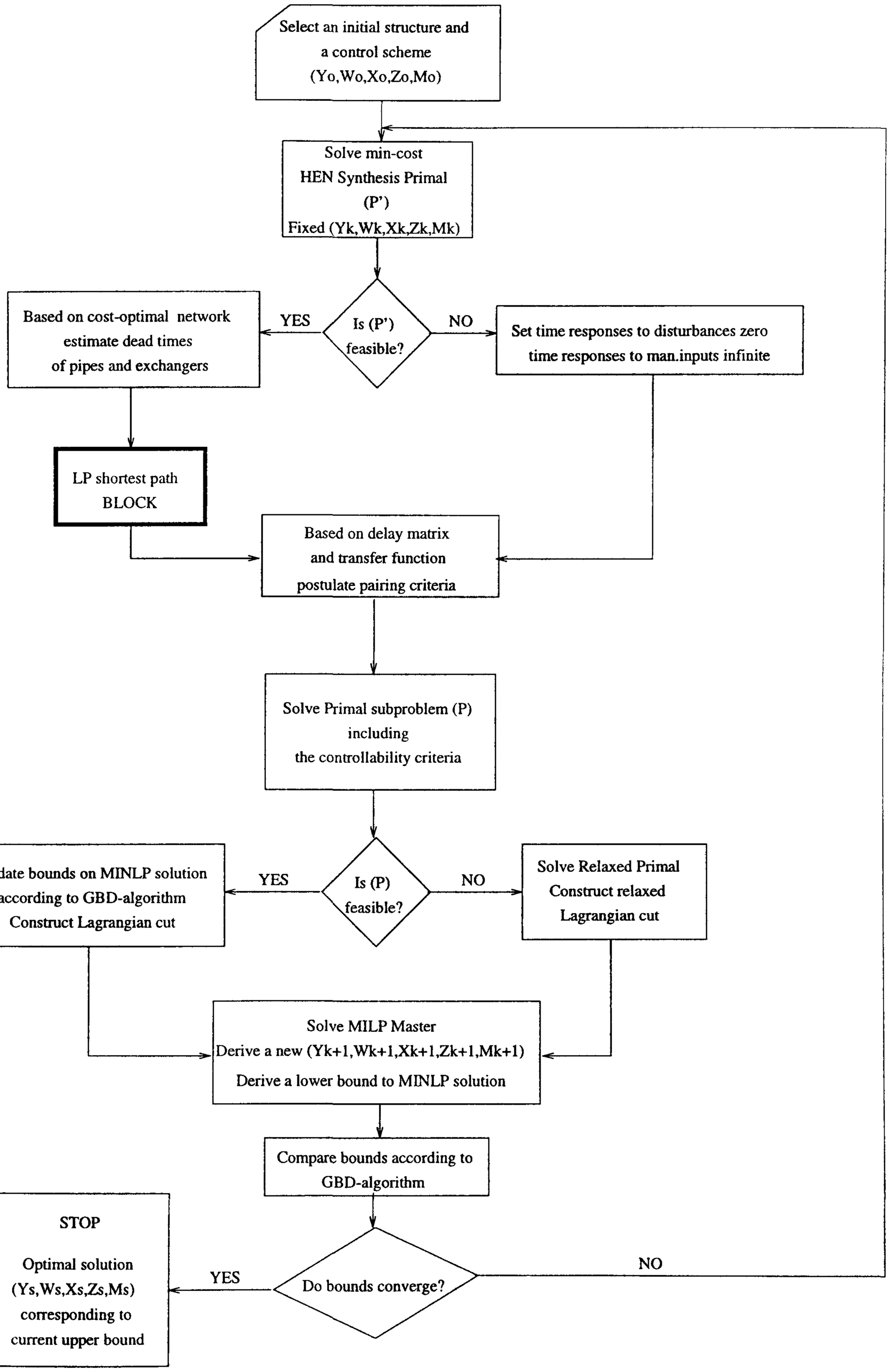

Figure 3.15: Synthesis of cost-optimal and controllable HENs

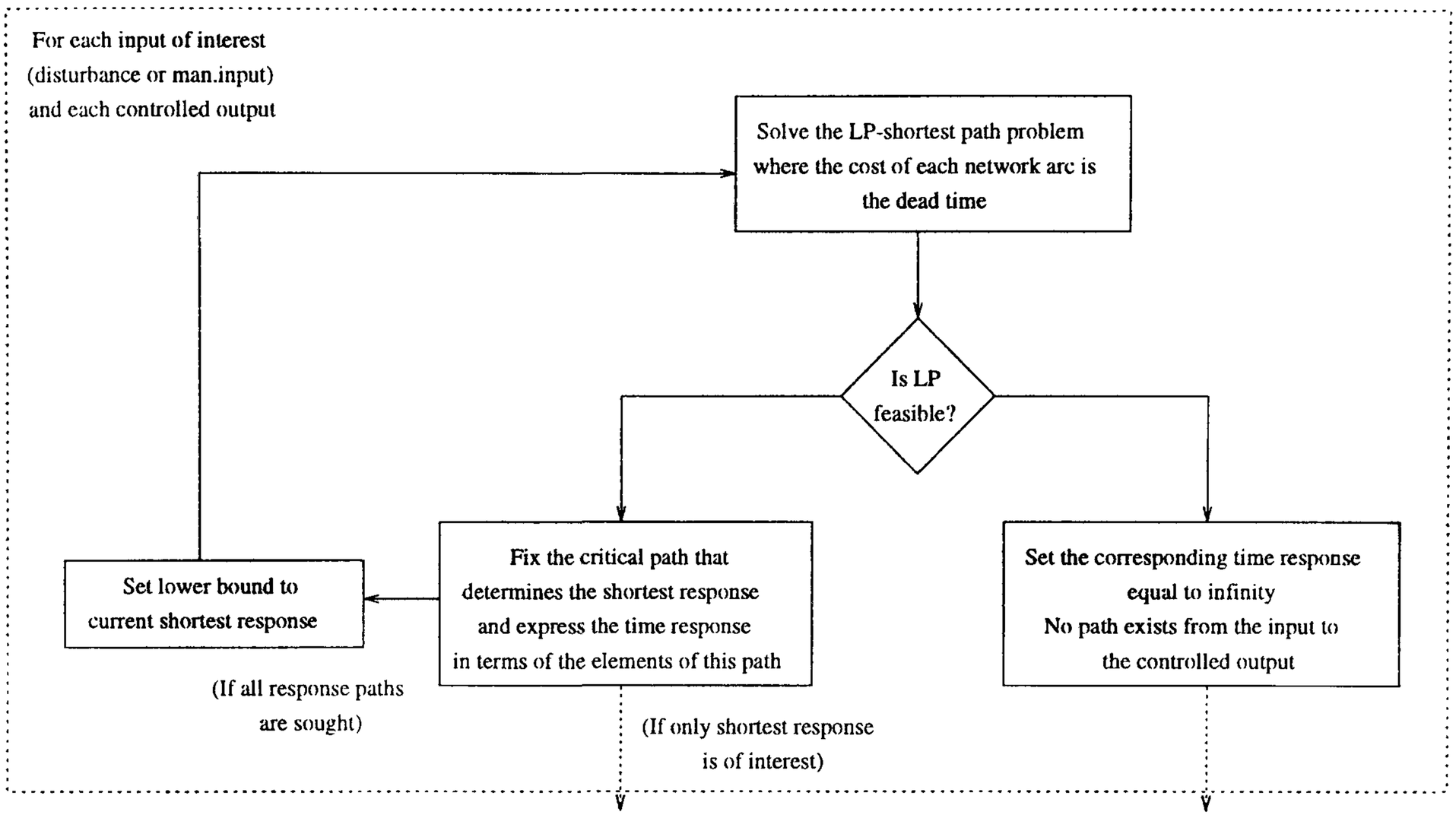

Figure 3.16: LP-shortest path BLOCK

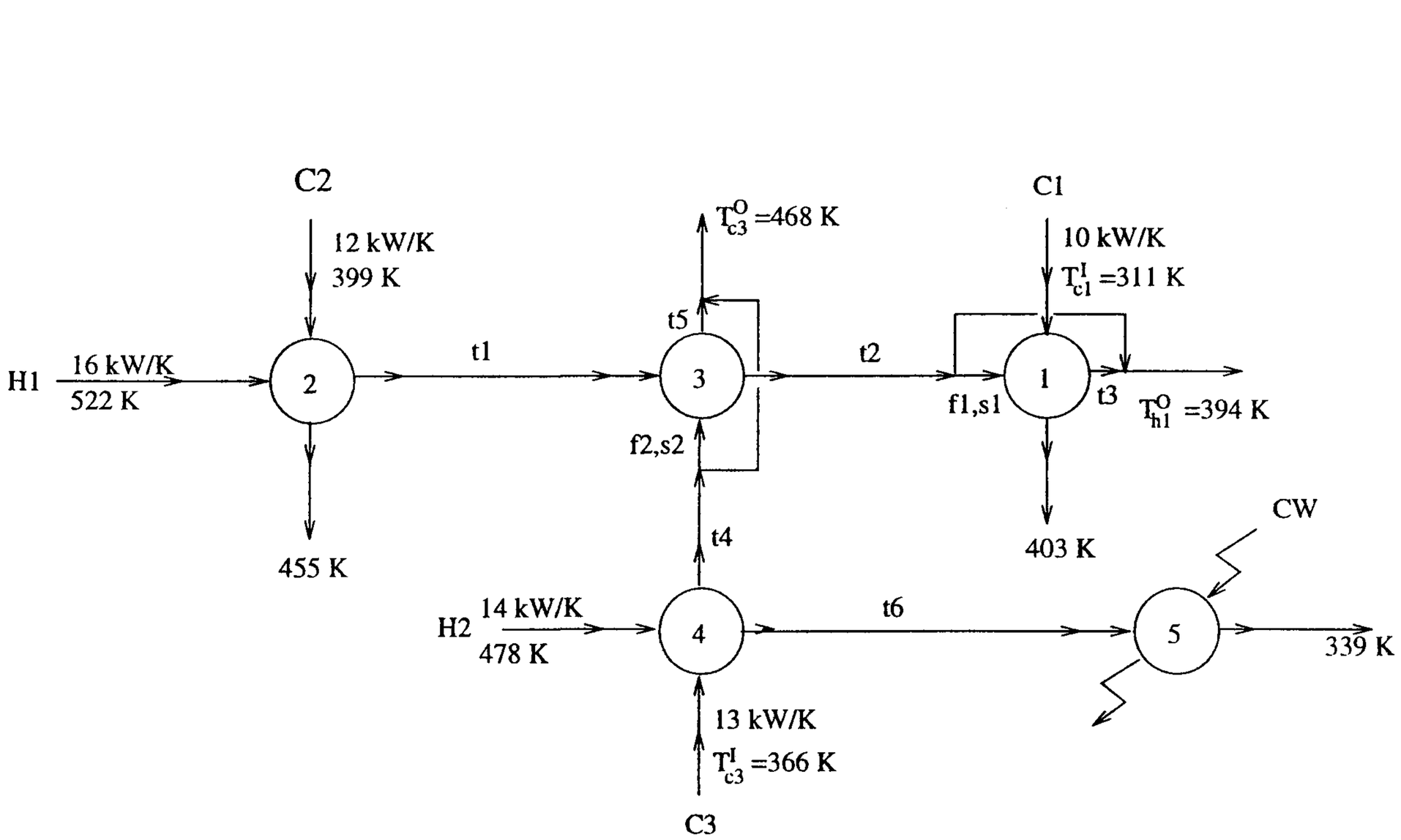

Figure 3.17: Potential network structure and control scheme

Input / Output	T^I_{C1}	T^I_{C2}	s^{HE}_{H1C1}	s^{CE}_{H1C3}
T^O_{H1}	103.781	285.244	48	140.57
T^O_{C3}	∞	189.143	∞	26

Table 3.11: Fastest time response of controlled outputs in proposed structure

Input / Output	s^{HE}_{H1C1}	s^{CE}_{H1C3}
T^O_{H1}	11.392	6.288
T^O_{C3}	0	-13.023

Table 3.12: Gains matrix for proposed control scheme

Example 3.6

The proposed synthesis framework of Figure 3.15 can be applied to the retrofit and multiperiod cases as well. When periods of operation are considered, the multiperiod hyperstructure model is used and the variable delay matrix and gain matrix are considered for each period of operation. The controllability criteria must hold for *all* the considered periods.

Consider the existing network of the fouling example (Kotjabasakis and Linnhoff, 1987) in Figure 3.18. Stream and exchanger data are given in Tables 3.13 and 3.14. The heat transfer coefficient between streams $H1-C1$, depending on the temperature of stream $C1$, varies as shown below:

$$0.081\ KW/m^2K\ \leq U_{H1-C1}\ \leq\ 0.12\ KW/m^2K$$

The outlet temperatures of the process streams are bounded (upper bounds for the hot streams and lower for the cold are given in Table 3.13); moreover, those of $H1$ and $C1$ must be controlled, thus defining two control objectives, whereas the inlet temperature of $H2$ is considered as a disturbance input.

A two-period retrofit model is employed, with the two extreme values of U_{H1-C1} defining the periods of operation. A control structure is also sought, based on the dynamic decoupling, time effective control and minimal interaction criteria described in the previous sections.

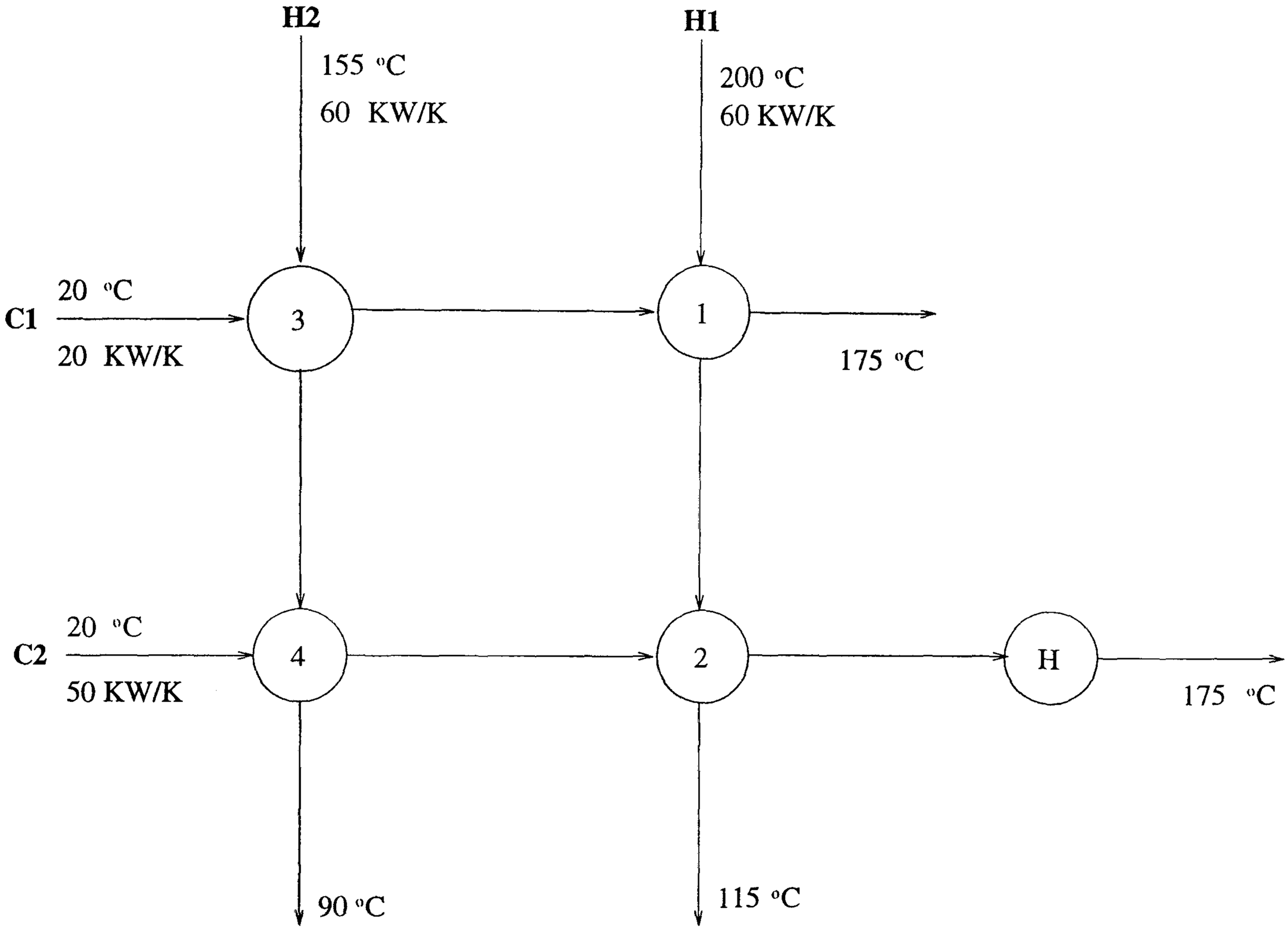

$$0.081 \ \text{KW/m}^2\text{K} \ \leq \ \text{U1} \ \leq \ 0.12 \ \text{KW/m}^2\text{K}$$

Figure 3.18: Existing Network for Example 3.6

Stream No.	T^{in} (^oC)	T^{out} (^oC)	FCP (KW/K)
H1	200	115	60
H2	155	90	60
C1	20	175	20
C2	20	175	50
STEAM	300	300	

Table 3.13: Stream data for fouling example.

Exchanger No.	Area (m^2)	U (KW/m^2K)
1	305	0.12-0.081
2	600	0.15
3	63	0.225
4	173	0.36

Table 3.14: Exchanger areas for fouling example.

Input / Output	T^{in}_{H2}	s^{CE}_{H1C1}	s^{HE}_{H1C1}
T^{O}_{H1}	552.60...543.00	132.45	358.26...319.30
T^{O}_{C1}	255.01...251.20	∞	71.45...61.83

Table 3.15: Time responses in proposed network and control structure (2 periods).

For the retrofit, steam at 300^oC is considered available as hot utility. Operating cost and investment cost data are given in Table 3.6. A $\Delta T_{min} = 5^oC$ is specified. When control alternatives are considered, only exchanger bypass placement is taken into account.

The retrofitted network is shown in Figure 3.19 and was obtained in 5 GBD iterations (consuming approximately 3800 CPU seconds on a SPARC-10 workstation). The area of exchanger 3 is increased to 168.9 m^2 and bypasses are placed on the hot side of exchanger 1 to control T^{out}_{C1}, the cold side of exchanger 2 to control T^{out}_{H1} and the cold side of exchanger 3 to exploit area utilization of exchanger 3. The proposed control structure may not be the best possible one. However, as it can be seen in Tables 3.15 and 3.16, it complied with the considered controllability requirements (the time responses to the manipulating inputs are decoupled and the gain matrix features diagonal dominance). The utility consumption is in average 1522 KW. The proposed network features a total annualized cost of \$ 25558 yr^{-1}.

3.11 Summary and Discussion

The mass/heat exchange hyperstructure representation framework, introduced in Chapter 1, as applied to heat integration schemes, has been utilized in this Chapter to develop a systematic framework for the inclusion of controllability considerations within the synthesis and/or retrofit

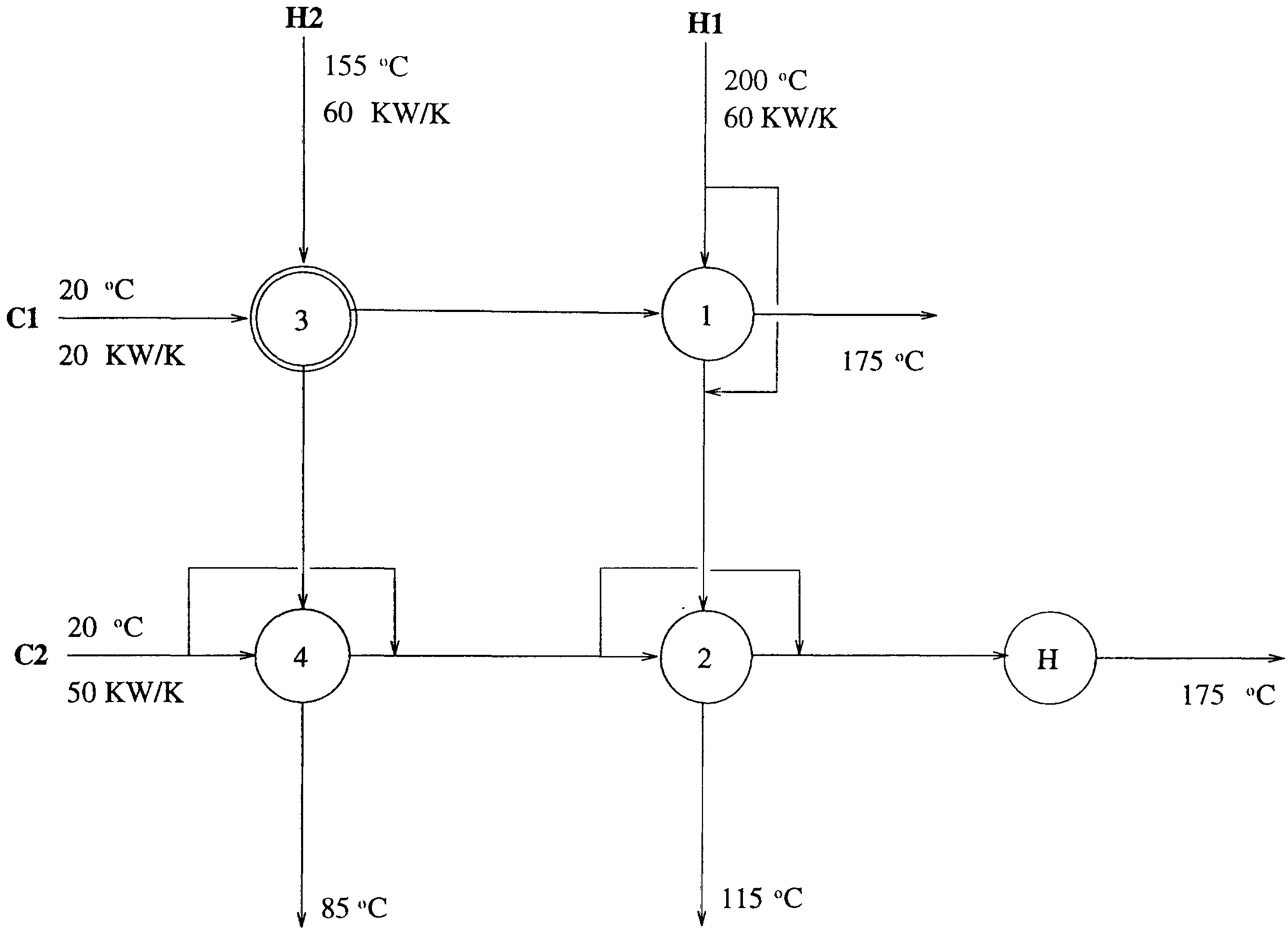

Figure 3.19: Retrofitted Network for Example 3.6

Input / Output	s^{CE}_{H1C1}	s^{HE}_{H1C1}
T^O_{H1}	23.505	6.157...0.595
T^O_{C1}	0	-42.602...-5.579

Table 3.16: Gain matrix in proposed network and control structure (2 periods).

design of HENs *without decomposition.*

A variable time delay matrix has been introduced, which is postulated automatically during the synthesis (or retrofit) procedure, employing graph theory concepts. The entries of the time delay matrix are the time responses of controlled outputs to manipulating and disturbance inputs. A simplified model has been used here for the dead times of heat exchangers. Alternative (and more detailed) dynamic models can be employed to describe the dynamic behaviour of heat exchangers and pipes (such as the lumped parameter model), albeit at the expense of computational effort, since at the synthesis/retrofit model the network operating point is not prespecified, but subject to optimization.

A variable gain matrix has also been introduced, which is derived from analytical linearization of the dynamic models of the hyperstructure elements around a variable operating point. A first order model is employed for this purpose to describe the behaviour of the heat exchanger.

A number of controllability criteria can be postulated based on the time response and gain matrices and explicitly included within the synthesis (or retrofit) model to drive the optimization towards networks with favourable controllability characteristics. Here diagonal dominance of the gain matrix, dynamic decoupling and "time-effective" control have been discussed. Although these might not always be necessary and sufficient criteria for "optimal" control structures, they might prove effective in eliminating "bad" network and control structures at the early synthesis and design stages. Furthermore, one can envision the inclusion of other controllability criteria, following the basic ideas and steps of the proposed framework.

It has been shown, that it is indeed possible to include analytical controllability considerations and explicit (yet simple) dynamic controllability criteria at the synthesis level, in order to assess the trade-offs between total (investment and operating) cost and controllability in a systematic way.

Mass/Heat Integrated Processes for Waste Minimization

Chapter 4

Synthesis of Mass Exchange Networks

The synthesis problem of mass exchange networks is addressed in this Chapter, as a waste treatment or solvent recovery alternative. The synthesis problem is formulated as an MINLP (section 4.4) driven by the optimization of a total synthesis cost, where regeneration alternatives are explored simultaneously through a MEN hyperstructure. The synthesis model can accommodate single and multiple component targets. A number of example problems illustrate the impact of simultaneously minimizing operating and investment cost.

4.1 Introduction

In Part II the mass/heat exchange hyperstructure representation framework was restricted to the synthesis of heat recovery systems (heat exchange alternatives only). Heat transfer principles have been utilized to describe heat exchange possibilities within a hyperstructure of alternatives. Similarly, mass transfer principles only, can be utilized to describe mass integration of process streams for separation purposes. Recently, environmental specifications and economic considerations have drawn attention to the integration of treatment technologies as a cost-effective way for the removal or recovery of certain components from process streams. "End-of-pipe" treatment can be integrated with the utilization of waste materials through the synthesis of "mass efficient" processes. A mass exchange network has been defined as "a system of separators and mass transfer units that achieves in a cost effective manner minimal discharge of hazardous waste streams" (Cohen and Allen, 1992; El-Halwagi and Manousiouthakis, 1989).

Synthesis of separation processes in general, has been an active research field, with the focus being, however, on the synthesis of distillation sequences, where multicomponent feeds streams are separated in a number of multicomponent product streams (Nishida *et al.*, 1981; Westerberg, 1985). While solvent recovery, product purification and waste treatment have been the subject of numerous researchers, most work has been centered on separation technologies rather than developing a separation scheme in general. Work on waste dephenolization, water treatment, metal recovery has been focussed on identification of optimal separation conditions, properties of several separating agents, kinetics and dynamics of mass transfer (Lannouette, 1977; Lewis and Martin, 1967).

El-Halwagi and Manousiouthakis (1989) addressed the problem of synthesizing mass exchange networks for waste treatment, considering thermodynamic feasibility of mass exchange and economics. Using Pinch Technology principles, they assume linear equilibrium relations to develop a Composition Interval Table (CIT), analogous to the Temperature Interval Table of the HEN synthesis problem. A minimum allowable composition difference between rich and lean streams, ϵ, is introduced. Minimum cost of Mass Separating Agents (MSA) is determined subject to the thermodynamic constraints which are imposed by the equilibrium relations. The Composite Curve concept is also adopted and, based on the identification of the Pinch, a number of rules are developed for the derivation of the network.

In a later work of the same authors (1990*a*), the problem of determining minimum cost of MSA's is formulated as an LP transshipment model, analogous to the HEN transshipment model of Papoulias and Grossmann (1983). The model is based on a given ϵ (minimum allowable composition difference) and a Composition Interval Diagram (CID). The pinch points are identified and an MILP transshipment formulation is developed to determine the minimum number of mass transfer units. By not permitting recycling and mixing the network configuration is then derived manually. Investment cost is optimized through optimization of the ϵ in an iterative procedure.

The same sequential design approach of first identifying the Pinch and the corresponding minimum MSA cost for a given ϵ and then employing evolutionary methods to derive the network, is applied by El-Halwagi and Manousiouthakis (1990*b*) in the simultaneous synthesis of mass-exchange and regeneration networks. CID's are developed for both networks and feasibility criteria for mass exchange above and below the Pinch are introduced. Based on these criteria a mixed integer nonlinear programming (MINLP) formulation is developed for the identification

of the MEN-pinch among a number of candidates. This MINLP problem results in the minimum MSA cost for both primary and regeneration networks. In the sequel, the classical MILP transshipment model is solved to determine the minimum number of units, whereas no systematic methods are provided for the derivation of the network configuration. It should be noted that the whole venture cost is dependent on the initial selection of the minimum allowable composition difference. Within the same scope, El-Halwagi *et al.* (1992) addressed a number of specialized problems, as dephenolization networks and reactive mass exchange networks (El-Halwagi and Srinivas, 1992), where the appropriate equilibrium relations are derived. Recently, Manousiouthakis and his coworkers have addressed the problem of MEN synthesis through their proposed State-Space synthesis approach, reviewed in Chapter 6 (El-Halwagi, 1992; Srinivas and El-Halwagi, 1993; Gupta and Manousiouthakis, 1994). Flower *et al.* (1993) propose a graphical means to represent the total mass balance of the process and several process blocks as an aid to the engineer at the preliminary design stages for waste minimization.

Up to this point the Mass Exchange Network (MEN) synthesis problem has been addressed through decomposition based on Pinch Technology principles. The major limitation in such an approach is that the sequential synthesis procedure does not offer overall cost optimality of the final network, since cost parameters are not simultaneously optimized. Furthermore, no systematic method is provided for the derivation of the network configuration. The mass/heat exchange hyperstructure representation will be employed in this chapter to explore mass exchange alternatives only, for the synthesis of waste treatment ("end-of-pipe") systems. All structural and operational alternatives for a mass exchange network will be considered *simultaneously*.

4.2 MEN Synthesis Problem

The synthesis of mass exchange networks involves a number of rich streams in terms of certain components, which can be either undesirable and/or forbidden wastes or valuable species and a number of process or auxiliary lean streams (see Figure 4.1). The integration of these streams aims to the purification of the rich streams and recovery of solvents and solutes at the minimum investment and operating cost (cost of lean streams). The alternative of regenerating and re-using some of the available lean streams (or Mass Separating Agents) may alter the total venture cost and must be taken into account.

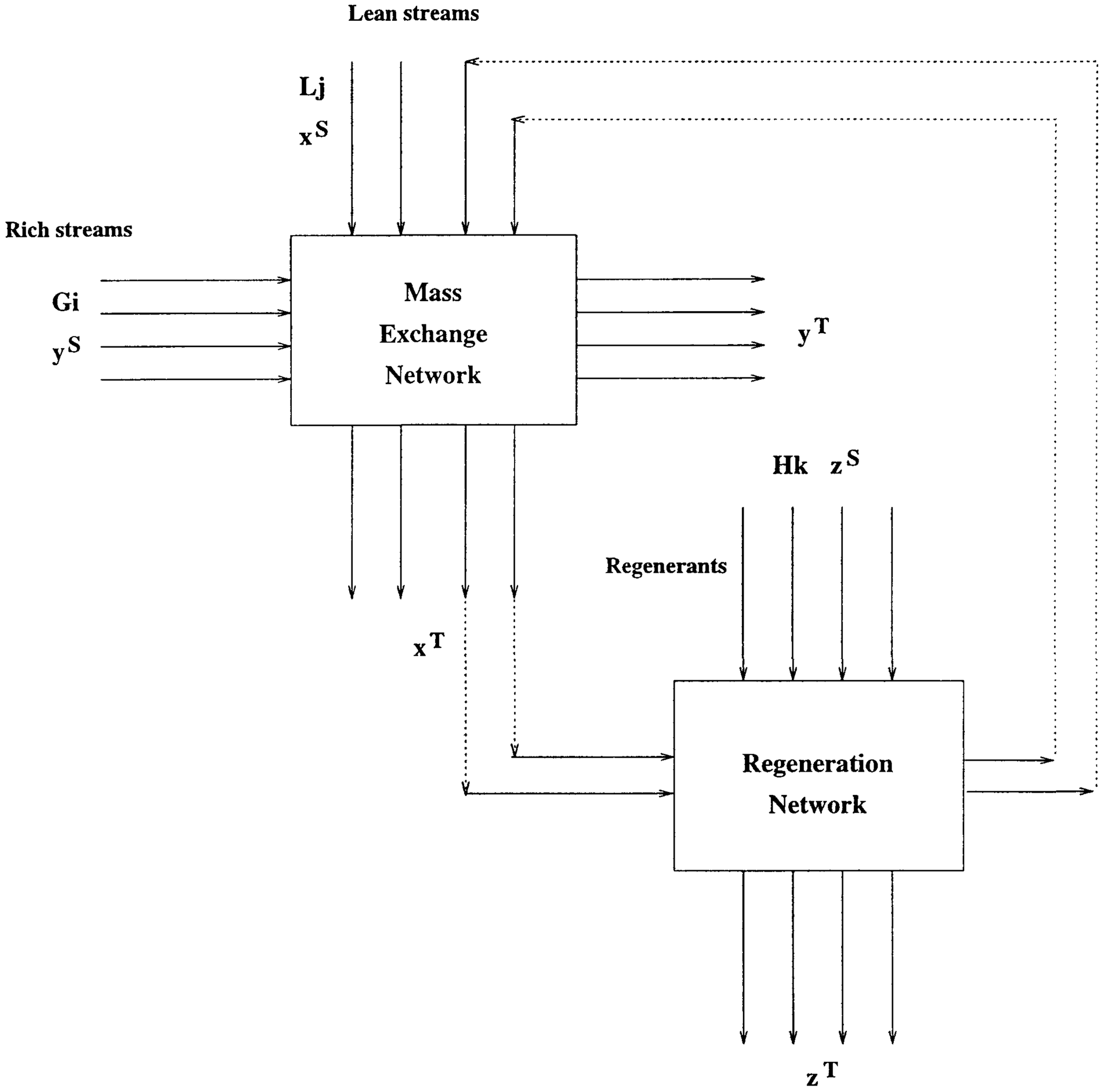

Figure 4.1: Mass Exchange Network

The MEN synthesis problem can be stated as follows:

Given are:

- A set $\mathbf{RS} = \{i|i = 1, \ldots, N_R\}$ of rich process streams, their mass flow rates G_i, their initial compositions, with respect to the component that must be removed, y_i^S and their desired outlet composition or an upper bound for this, y_i^T, or y_i^U respectively (imposed either by environmental regulations or economical considerations).

- A set $\mathbf{LS} = \{j|j = 1, \ldots, N_L\}$ of lean streams (or Mass Separating Agents), which may be process streams or auxiliary external lean streams, their initial compositions, x_j^S and an upper bound to their outlet compositions, x_j^U. Also, an upper bound to the mass flowrate that can be used in the network, L_j^U and a cost associated with the consumption of each lean stream, C_j.

  A subset $LS_{reg} = \{j|j = 1, \ldots, N_{Lreg}\}$ of lean streams, $\mathbf{LS}$, may be regenerable (with their concentration in the transferable component decreased to x^S) and recycled.

- A set $\mathbf{HS} = \{j|k = 1, \ldots, N_H\}$ of regenerating agents, their initial compositions, z_k^S, an upper bound to their outlet compositions, z_k^U and an upper bound to the mass flowrate that can be used in the network, H_k^U. Also a cost associated with their consumption, C_k.

- An equilibrium relation for the distribution of the transferable component between a rich stream i and a lean stream j:

$$y_i^\star = \phi_{ij}(x_j^\star)$$

- An equilibrium relation for the distribution of the transferable component between a regenerable lean stream j and a regenerating agent k:

$$x_j^\star = \phi'_{jk}(z_k^\star)$$

- A minimum composition approach (ϵ_{ij} and ϵ'_{jk}) so that to ensure feasible mass transfer (analogous to the ΔT_{min} in the HEN problem). This ϵ does not in any case prespecify the lean stream consumption.

- The type of potential mass exchanger for each pair of rich and lean streams and lean and regenerating streams (*e.g.* perforated plate extraction column, packed tower)

The objective is then to synthesize *an annualized cost optimal mass exchange network*, in terms of *stream matches, regeneration of MSAs, lean and regenerating stream consumption, network topology and investment cost*, that can satisfy the specifications for the rich, lean and regenerating streams.

The following assumptions are made:

1. The mass flow-rates of each stream remain constant throughout the network.

2. The equilibrium of the considered component to be transferred does not depend on the other solutes. Furthermore, in the range of compositions involved, the equilibrium relations are linear, of the following form:

$$y_i^\star = m_{ij} x_j^\star + b_{ij}$$

$$x_j^\star = n_{jk} z_k^\star + c_{jk}$$

3. The mass exchangers are considered of the counter-current type.

4. No mass exchange between rich streams only, or lean streams only is allowed.

5. Heat integration between streams is not allowed.

6. The network operates under constant pressure.

The first assumption is realistic when small composition changes take place or the mass exchange is carried out through counter diffusion. In Chapter 6, it will be shown how significant composition changes can be taken into account also. The second assumption refers to linear equilibrium relation, where the equilibrium constants are mutually independent for the various components. This assumption can be easily relaxed and any well defined equilibrium relation can be used. The fourth assumption excludes the possibility of different rich stream mixing and will be relaxed in Chapter 6, whereas the two last assumptions indicate that the streams preserve constant temperature and pressure and refer to the applicability of one equilibrium relation throughout the network.

The Mass Exchange Network synthesis concept can be illustrated with an example from *copper technology* (El-Halwagi and Manousiouthakis, 1990*a*). Etching of copper is achieved through

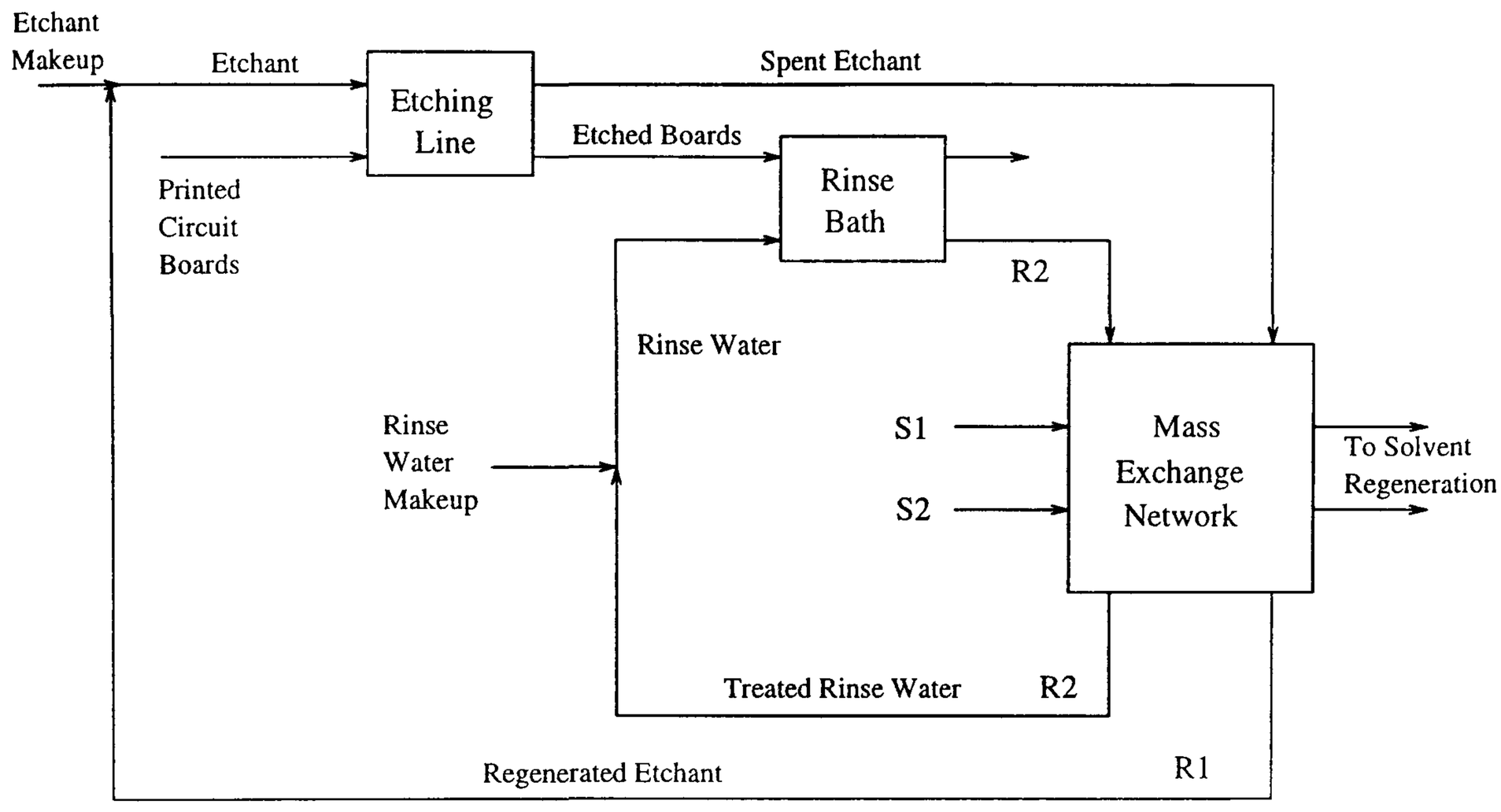

Figure 4.2: Recovery of Copper in an Etching Plant

Stream No.	Description	G_i (Kg/s)	y_i^s	y_i^t
R_1	amm.solution	0.25	0.13	0.1
R_2	rinsewater	0.1	0.06	0.02

Table 4.1: Rich streams of copper recovery problem

ammoniacal solution (see Figure 4.2) and etching efficiency is higher for copper concentrations in the ammoniacal solution between 10 and 13 w/w %. To maintain the desired copper concentration in the solution, copper must be continuously removed. Copper must also be removed from rinse water, with which the etched printed circuit boards are washed out, for environmental and economical reasons. Mass flowrate data and specifications on the concentrations of the two copper-rich streams are given in Table 4.1.

Two extractants are proposed for copper recovery, LIX63 (an aliphatic α-hydroxyoxime, S_1) and P_1 (an aromatic β-hydroxyoxime, S_2). Data on copper concentrations and cost of the two available lean streams are given in Table 4.2. Cost annualization is based on a working time of 8150 hr/yr and a tax factor (Aggarwal and Floudas, 1992) TF=0.2.

Stream No.	Description	L_j^{up} (Kg/s)	x_j^s	$x_j^{t,up}$	Cost $(\$/Kg)$	Ann. cost $(\$s/Kgyr)$
S_1	LIX63	∞	0.03	0.07	0.01	58680
S_2	P_1	∞	0.001	0.02	0.12	704160

Table 4.2: Lean streams of copper recovery problem

	Cost
Cost of plate-column	4552 N_{st} $\$yr^{-1}$
Cost of packed column	4245 H $\$yr^{-1}$

Table 4.3: Capital cost data for copper recovery problem

Within the ranges of copper concentrations of interest, the copper transfer between the given rich and lean streams is governed by the following linear equilibrium relations:

$R_1 - S_1$: $y_1 = 0.734x_1 + 0.001$

$R_2 - S_1$: $y_1 = 0.734x_1 + 0.001$

$R_1 - S_2$: $y_1 = 0.111x_2 + 0.008$

$R_2 - S_2$: $y_2 = 0.148x_2 + 0.013$

Two types of contactors are considered: a perforated-plate column for S_1 (LIX63) and a packed tower for S_2 (P_1). The annualized investment cost of a plate-column is based on the number of plates N_{st} (Peters and Timmerhaus, 1981), which is determined through the Kremser equation (see Appendix G). The cost of a packed tower is based on the overall height of the column ($H_R N_R$) (Appendix G). Annualized investment costs are given in Table 4.3.

Following the sequential synthesis approach, the proposed solution by El-Halwagi and Manousiouthakis (1990*a*), based on minimum extractant consumption, features an annualized operating cost of \$27758 yr^{-1}, whereas the investment cost of the required equipment is \$95695 yr^{-1} (TAC = \$ 123453 yr^{-1}). The network is illustrated in Figure 4.3. It involves three mass exchange units. $S1$ (0.27985 Kg/s) is split towards mass exchange units with $R1$ and $R2$, whereas $R2$ is further cleaned by 0.0161 Kg/s of $S2$. Although the operating cost is the minimum allowable by

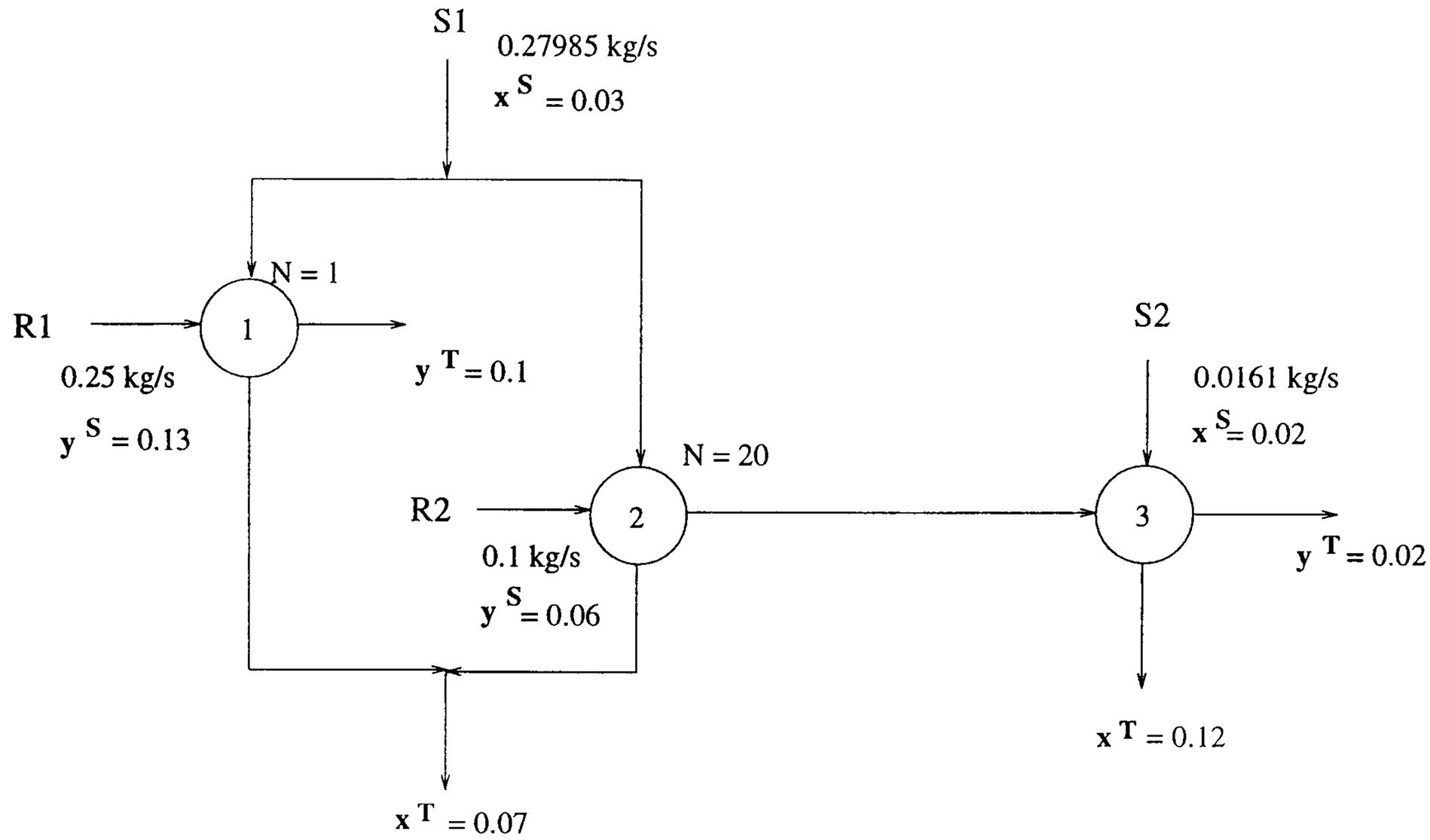

Figure 4.3: MEN for copper recovery, proposed by El-Halwagi and Manousiouthakis

the selected ϵ's, a large investment cost is required to accomplish the specified separation tasks. In the next sections, the mass/heat exchange hyperstructure is employed and a synthesis procedure is proposed, where both operating and investment cost are optimized simultaneously. It will be shown that the simultaneous synthesis approach results in a mass exchange network that features (i) a different flowsheet, and (ii) significantly better annualized cost.

4.3 Mass Exchange Network Hyperstructure

Structural and operational alternatives for a separation scheme, that satisfies the specifications stated in the previous section, can be represented through the mass/heat exchange hyperstructure (see Figure 4.4), introduced in Chapter 1, limited to mass exchange blocks only. The considered mass exchange blocks correspond to all possible matches between the given rich, lean and regenerating streams. Since each stream preserves its identity (assumption 4), mass exchanger interconnections are limited to bypasses of each stream from a mass exchanger to other exchangers of the *same* stream. The hyperstructure alternatives for a rich stream, a non-regenerable lean stream, a regenerable lean stream and a regenerating stream are illustrated in Figures 4.5, 4.6 and

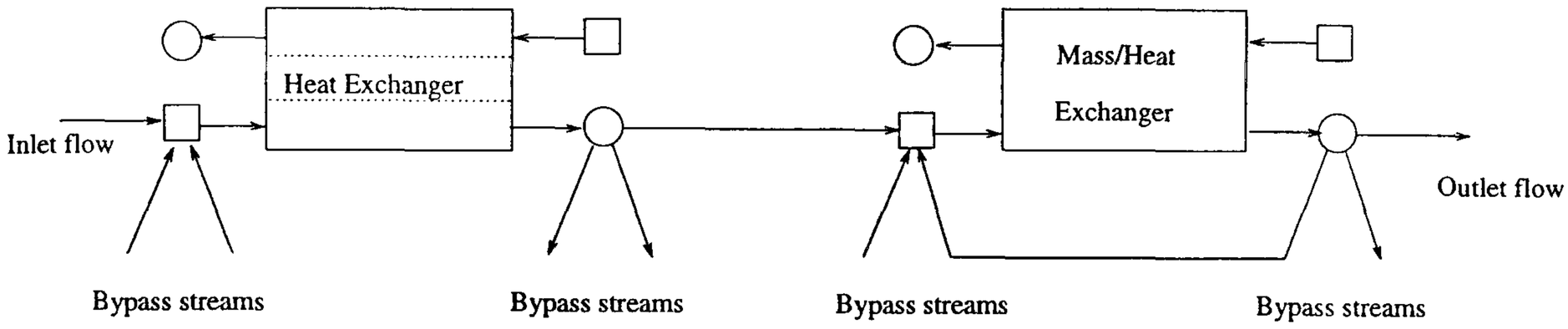

Figure 4.4: Mass/Heat Exchange Hyperstructure

4.7 respectively.

Note that:

- Each potential match between a rich and a lean stream (MSA) and/or between a regenerable lean stream and a regenerant corresponds to a potential mass exchanger (one-to-one correspondence). The regenerable lean streams act as "lean-side-streams" in exchangers with the problem rich streams, *i.e.* their concentration in the transferable component is increased, while they act as "rich-side-streams" in regeneration exchangers, *i.e.* their concentration is decreased.

- Each stream entering the network is split towards *all* its potential mass exchange units.

- The possibility of multiple mass exchange between two streams is considered. However, this is not similar to an *a-priori* network partition to subnetworks (El-Halwagi and Manousiouthakis, 1990*a*), since the final number of mass exchangers and subnetworks is not determined by a prespecified pinch point, but through the economic evaluation of all mass exchange alternatives.

- Prior to each potential mass exchanger a mixer is considered for each stream, where the flow from the initial splitter and bypass flows from all the other potential exchangers of the stream are merged to a flow towards the exchanger.

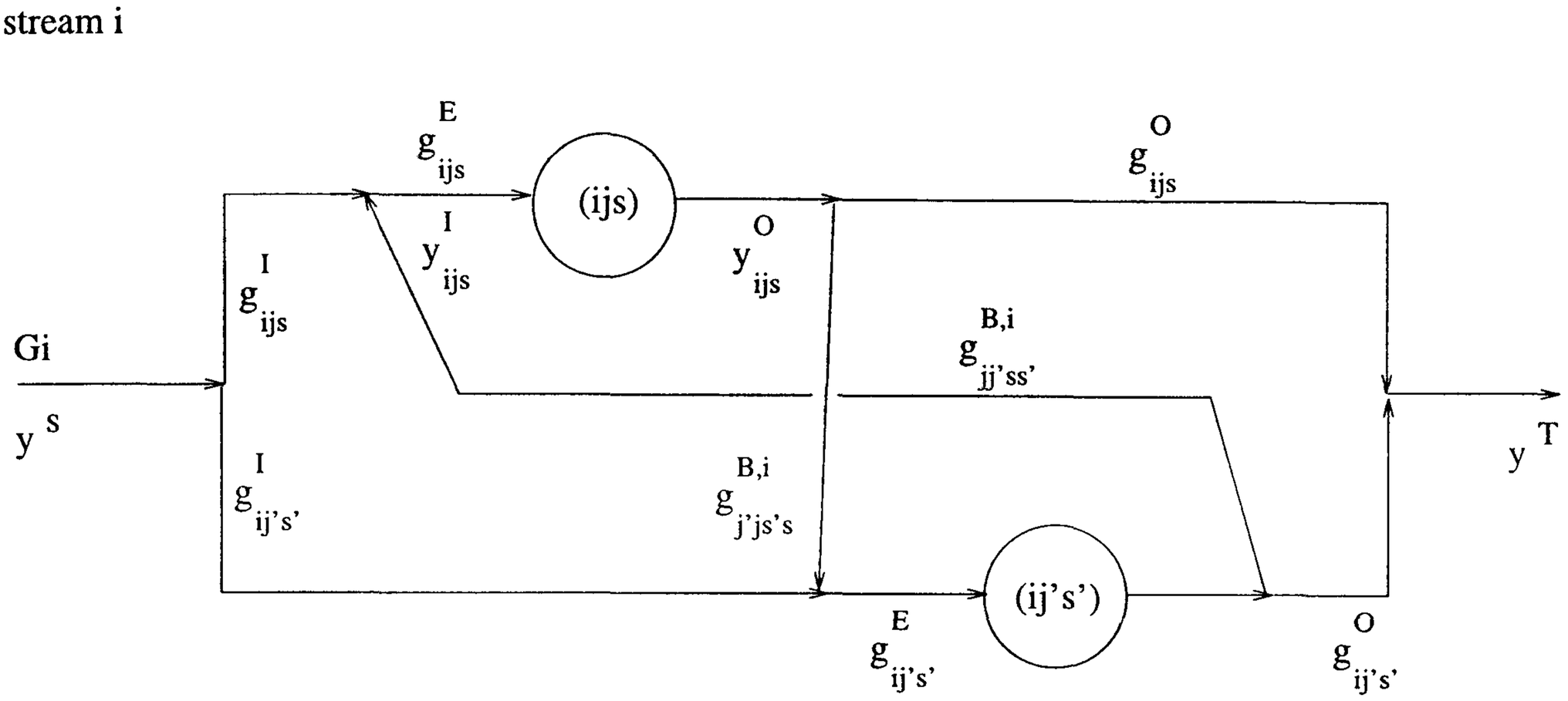

Figure 4.5: Rich and Lean Stream Hyperstructures

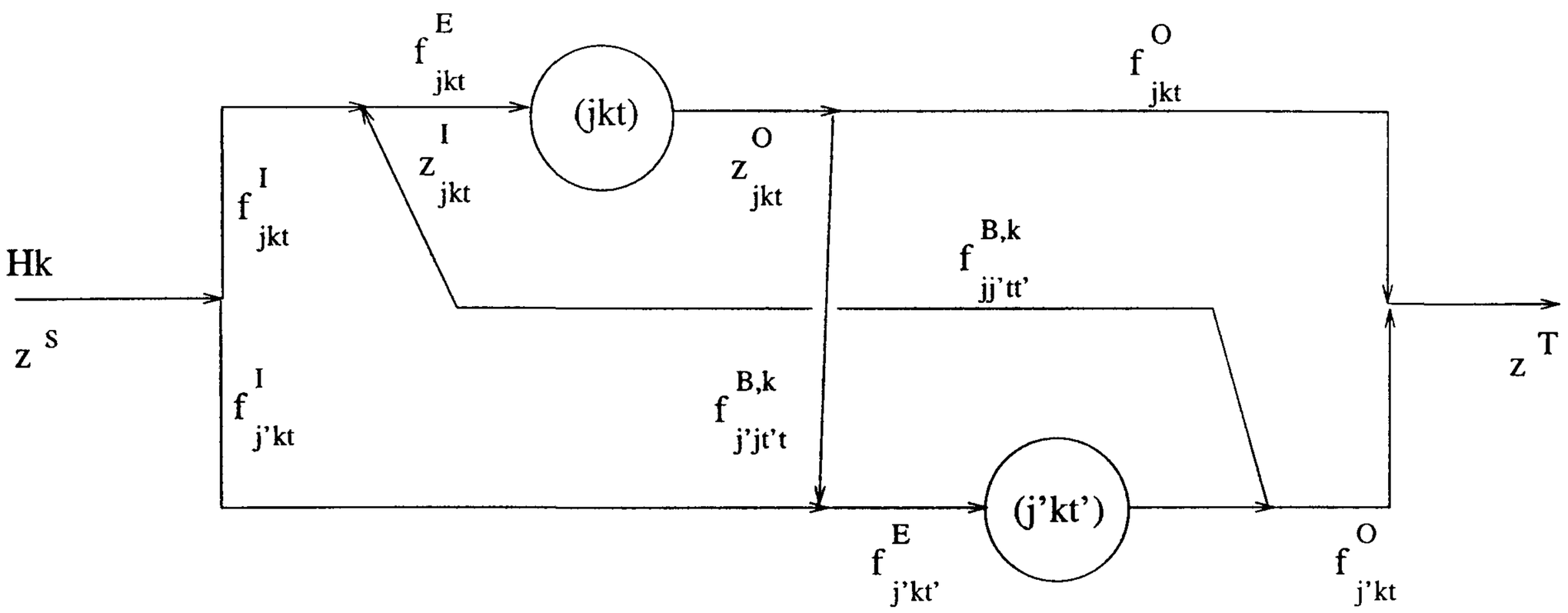

Figure 4.6: Regenerant Hyperstructure.

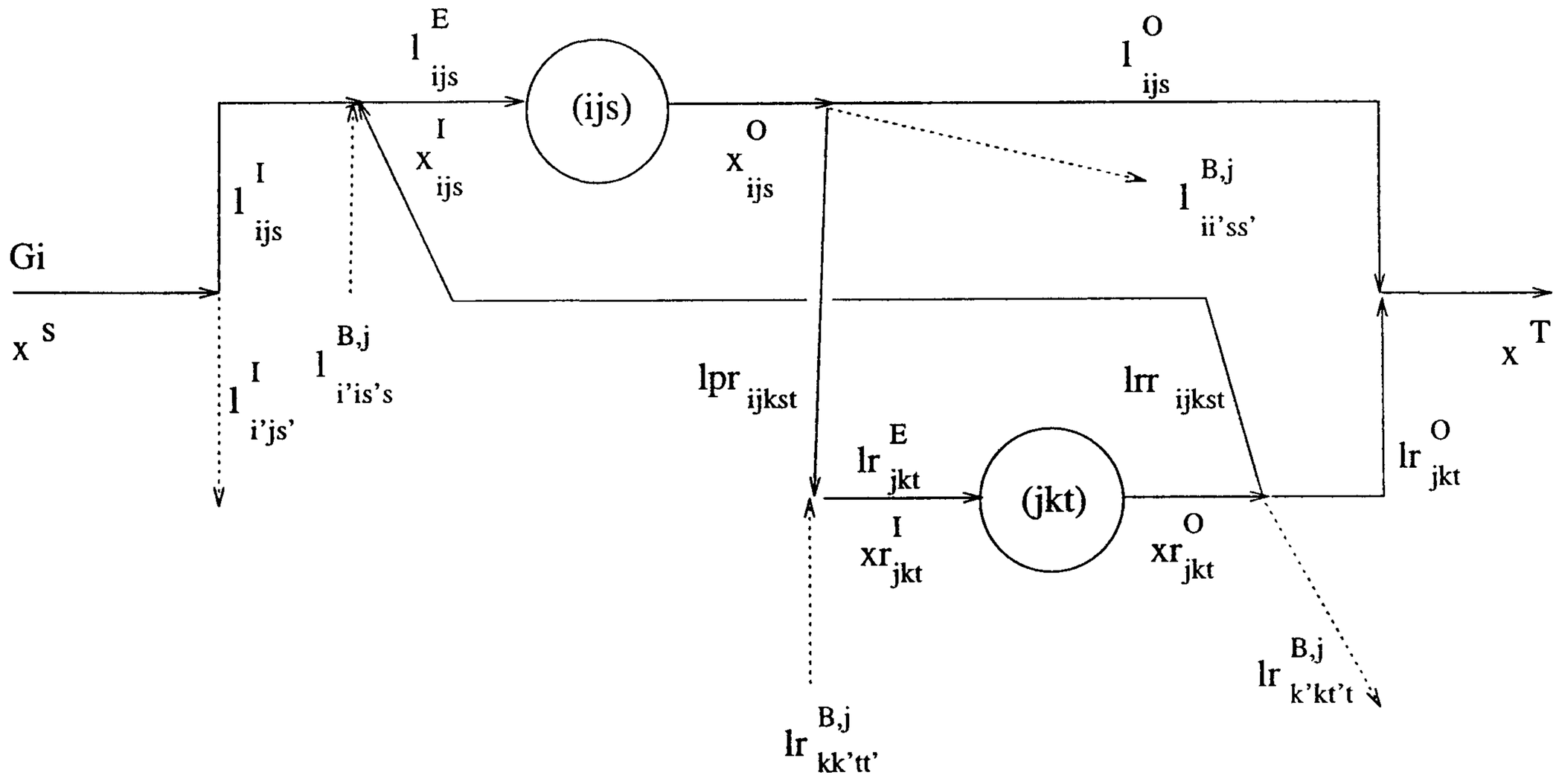

Figure 4.7: Regenerable Lean Stream Hyperstructure.

- After each mass exchanger a splitter is considered for each stream, from which potential flows are driven towards the final mixer of the stream and the other exchangers of the stream.

- For regenerable streams, bypass flows are considered from the mass exchangers, where the stream acts as MSA to regenerating mass exchangers and vice versa.

4.4 Mass Exchange Network Synthesis Model

The Mass Exchange Network Hyperstructure is described by mass balances for total stream flows and the transferable component at the splitters, mixers and mass exchangers of the hyperstructure. The existence of each mass exchanger in the final network is represented by a binary variable and the MEN synthesis problem is formulated as a mixed integer nonlinear programming optimization problem. In particular, it involves:

- Overall mass balances at the initial splitter of each stream. The total flows of lean stream and regenerating streams are not fixed, but *variables to be optimized through the operating cost.*

- Overall mass balances at the mixer preceding each mass exchanger for each stream.

- Overall mass balances at the splitter after each exchanger of each stream.

- Mass balances for the transferable component at the mixer preceding each mass exchanger for each stream.

- Mass balances for the transferable component at the final mixer of each stream.

- Mass balances for the transferable component at each potential exchanger, for the "rich" and the "lean" side.

- Feasibility constraints that ensure the existence of a non-zero driving force for the mass transfer, at the inlet and the outlet of each mass exchanger. These constraints are based on the given minimum composition approach ϵ and guarantee that mass transfer occurs in a finite number of mass transfer stages. ϵ does not determine the operating cost, as in the pinch driven approaches (El-Halwagi and Manousiouthakis, 1989; El-Halwagi and Manousiouthakis, 1990*a*).

– Mixed integer constraints, that determine the existence of mass exchangers, of the type:

$$X_{ij} - y_{ij}\mathbf{U} \leq 0$$

where X_{ij}, is the transferred mass, or a stream flow connected with the mass exchanger (i, j) and $\mathbf{U}$ an upper bound to X_{ij}.

- Sizing equations for the mass transfer units.

  When mass exchange takes place in a perforated-plate column, the number of required stages is associated to the corresponding mass exchange match as design variable, and is determined from the Kremser equation (Douglas, 1988).

  When absorption or stripping takes place, a packed tower is considered for the mass exchange, the height of which is determined by the number of equilibrium stages and the equivalent height of each equilibrium stage (see Appendix G).

- Bounds on variables.

- An objective function, where the total annualized cost of the MEN is minimized. This involves (i) the cost of the MSA that are not regenerated, (ii) the cost of regenerating agents and (iii) capital investment cost of the mass exchangers, on an annual basis.

The detailed synthesis model is described in Appendix G.

The MEN synthesis model is formulated as a MINLP and Generalized Benders decomposition (Geoffrion, 1972) is also employed for its solution, with the network matches determined in an outer Master MILP subproblem and the actual operating conditions determined in an inner Primal NLP subproblem. Global optimization algorithms (Floudas and Visweswaran, 1990; Floudas and Visweswaran, 1993) can be employed to overcome local optimality problems, due to non-convex terms.

4.5 Examples

Example 4.1

Consider the example described in section 4.1. A minimum composition difference of $\epsilon = 0.0001$ determines feasible mass exchange at the inlet and outlet of each potential mass exchange unit.

For the mass transfer we consider a perforated-plate column for S_1 (LIX63) and a packed tower for S_2 (P_1). The associated annualized investment costs are given in Table 4.3.

The proposed MINLP synthesis model is employed to determine a total annualized cost optimal mass exchange network for copper recovery and Generalized Benders decomposition is employed for its solution, as applied in OASIS package (Floudas, 1990). The MINLP problem features 110 rows and 84 variables, 4 of which are binary. The obtained network is shown in Figure 4.8. It features a total annualized cost of \$ 48710 yr^{-1}, out of which \$ 30490 yr^{-1} is the cost of the extractants. The flowrates of S_1 and S_2 are 0.2779 Kg/s and 0.02014 Kg/s. Compared to the solution proposed by El-Halwagi and Manousiouthakis (1990*a*), one can note that the mass exchange network of Figure 4.8 consists of units in series, with smaller number of required equilibrium stages. The excess mass flow of S_2 (compared with the minimum required $0.0161 Kg/s$) results in a lower investment cost at the second column, since the third exchanger accommodates larger mass load. Also, note that the total annualized cost obtained with the proposed non-decomposed approach has been reduced from \$ 123453 yr^{-1} to \$ 48710 yr^{-1} (60% reduction). The operating cost has been increased from \$ 27758 yr^{-1} to \$ 30490 yr^{-1} (9.8% increase), whereas the equipment cost has been reduced from \$ 95695 yr^{-1} to \$ 18220 yr^{-1} (80% reduction).

Example 4.2

Coal conversion systems include coal gasification and coal liquefaction, where coal is converted into more usable forms of fuels, such as medium-Btu gas, low-Btu gas, liquid fuels and solid residues (the latter two from liquefaction). Aqueous waste streams from coal conversion plants must be treated before disposed or recycled to the process, due mainly to their high concentrations in phenols. The recovery of phenols, being a valuable chemical feed-stock, from coal conversion plants wastestreams is an environmentally imposed task.

The mass exchange synthesis task involves four phenol-rich streams (see El-Halwagi and Manousiouthakis (1990*b*)):

- a wastewater stream R_1 from an oil-water-tar separator
- a phenolic based condensate R_2 from a waste heat boiler (WHB)
- aqueous waste stream R_3 from a solid-liquid separator

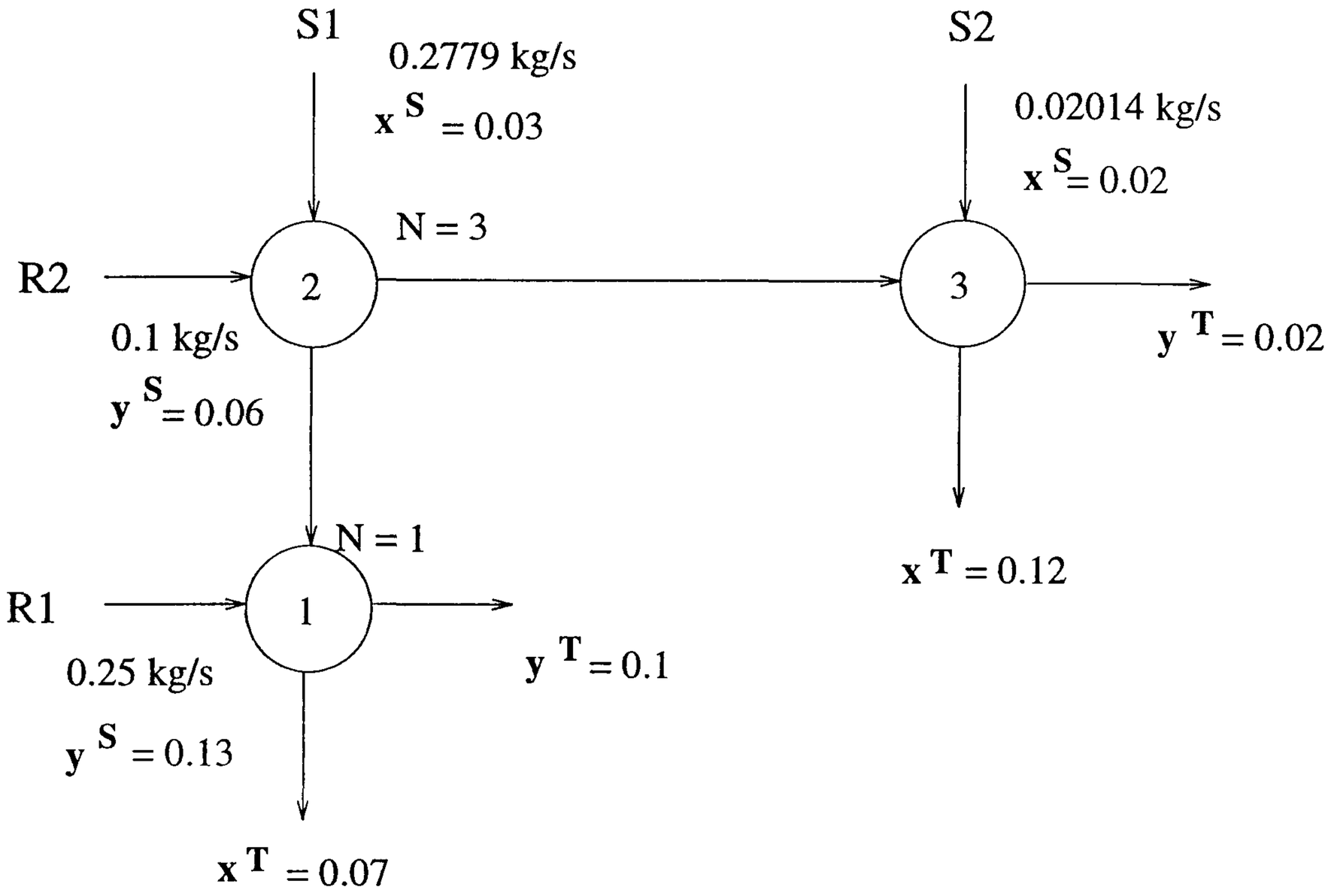

Figure 4.8: Proposed MEN for copper recovery

- wastewater stream R_4 from a spray washer

Mass flowrates and composition data for the rich streams are given in Table 4.4.

Available for the dephenolization are three MSA's:

- A light oil S_1 (Benzene-Toluene-Xylene mixture) which can extract phenols from rich streams
- Activated carbon

Stream No.	Description	G_i (Kg/s)	y^s	y^T
R_1	wastewater	3.3	0.05	0.0015
R_2	condensate	0.6	0.07	0.0030
R_3	wastestream	1.4	0.02	0.0030
R_4	wastewater	0.2	0.03	0.0020

Table 4.4: Rich streams in phenol recovery.

Stream No.	Description	L_j^U (Kg/s)	x^s	x^U	Cost $(\$/Kg)$	Ann.cost $(\$s/Kgyr)$
S_1	light oil	10	0.0013	0.025	0.01	58680
S_2	active carbon	10			0.07	417060
		H_j^{up}	z^s	z^U		
H_1	caustic soda	10	0	0.005	0.015	88020

Table 4.5: Lean streams in phenol recovery.

Biological treatment of the phenol rich streams can also be used to reduce the phenol concentrations, since they are highly biodegradable. However, biotreatment is only effective for moderate initial phenol concentration and thus it is not considered here as an alternative.

Activated carbon can be regenerated by caustic soda (H_1), which strips the adsorbed phenols by reacting with them towards sodium phenolate. The reaction is mass-transfer controlled and the contactor may be designed as a solvent extraction packed column. Composition and cost data for the lean streams and the regenerant are given in Table 4.5. In the composition range involved in the separation process, phenol mass transfer between rich and lean streams is governed by the following equilibrium relations:

S_1 $y = 0.71x_1 + 0.001$

S_2 $y = 0.13x_2 + 0.001$

For the pair $S_2 - H_1$ phenol mass transfer is based on the equilibrium :

$$x = 1.38z_1$$

A minimum allowable composition difference $\epsilon = 0.0001$ is given.

The generalized match network hyperstructure for primary and regeneration mass exchange networks is developed, where S_2 is a regenerable lean stream and thus the cost of its regenerated flowrate is included within the investment and operating cost of regeneration.

This regenerated flowrate actually corresponds to two active carbon columns which alternately are used for primary and regenerative mass transfer, whereas the caustic soda and rich streams flowrates are switched from one column to the other.

The MINLP synthesis model is solved via Generalized Benders decomposition and the proposed network is illustrated in Figure 4.9. It features a total annualized cost of \$ 957168.4 yr^{-1}. 9.33 Kg/s of S_1 are used to extract phenols from all the rich streams, whereas the specification on the target composition of R_1 is achieved after its treatment with active carbon. The used active carbon is regenerated by 3.2 Kg/s of caustic soda. Intermediate compositions of S_2 are illustrated in Figure 4.9. It must be noted, that although the proposed network by El-Halwagi and Manousiouthakis (1990*b*) is similar to the one of Figure 4.9; in their work, the consumption of the caustic soda is 0.3260 Kg/s which regenerates only 0.2215 Kg/s of S_2. That is partly due to the fact that the aforementioned authors consider an extra operating cost for the use of the regenerable S_2. In the proposed approach this cost is already included in the regeneration investment cost. Further comparison of the overall cost of the two MENs cannot be made, due to unavailability of split fractions in the solution proposed by El-Halwagi and Manousiouthakis (1990*b*). However one can notice the different piping layout, which, in previous cases, implied different number of required stages in the mass contactors.

4.6 Mass Exchange Networks with Multiple Component Targets

In many waste treatment cases one is interested in the removal of more than one impurities. The considered extractants in these cases may remove simultaneously more than one component. Then the separation task involves the derivation of a mass exchange network that can satisfy specifications on the overall compositions of process streams at the minimum total annualized cost.

The proposed MINLP MEN synthesis model (see Appendix G) can be applied with multi-component targets. In this case the stream compositions are expressed for each component in question. Equilibrium relations are considered given for each component of interest. If some of the available extractants can remove only a subset of the components that must be removed, then proper equilibrium constants are considered for these pairs (for the insoluble components) that prevent mass transfer. Thus all network alternatives are taken into account.

Mass balances for each component of interest are considered at the mixers and the exchangers of the superstructure. Design equations are expressed in terms of each equilibrium, but the number of plates and column heights are calculated uniquely for each mass transfer unit. Thus, "incompatible" targets (El-Halwagi and Manousiouthakis, 1989) can be effectively handled, since mass

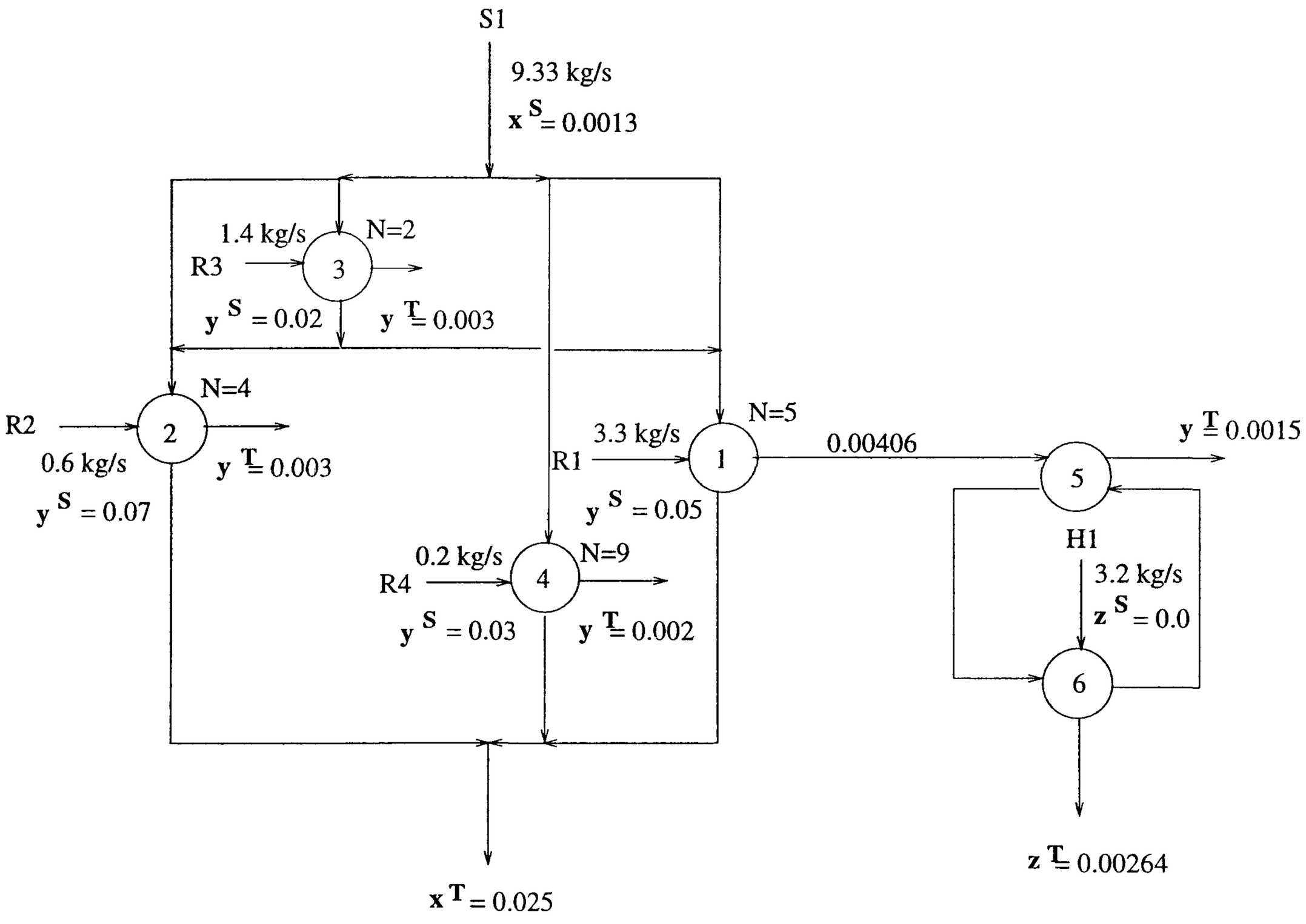

Figure 4.9: Proposed MEN for phenol recovery

Stream No.	Description	G_i (Kg/s)	$y^s_{H_2S}$	$y^s_{CO_2}$	$y^t_{H_2S}$	$y^t_{CO_2}$
R_1	COG	0.9	0.07	0.06	0.0003	0.005
R_2	tail gases	0.1	0.051	0.115	0.0001	0.01

Table 4.6: Rich streams in COG sweetening.

Stream No.	Description	L^{up}_j (Kg/s)	$x^s_{H_2S}$	$x^s_{CO_2}$	$x^{t,up}_{H_2S}$	$x^{t,up}_{CO_2}$	Ann. cost $(\$s/Kgyr)$
S_1	aq.NH_3	2.3	0.0006	0	0.031	0.171	117360
S_2	methanol	∞	0.002	0	0.0035	0.103	176040

Table 4.7: Lean streams in COG sweetening.

balances and feasibility constraints in each transfer unit drive the synthesis model to an adequate mass transfer scheme for each component.

Example 4.3

A common case of multicomponent targets is the removal of H_2S and CO_2 from COG (a mixture of $H_2, CH_4, CO, N_2, NH_3, CO_2$ and H_2S), (R_1) and the tail gases of a Claus unit (R_2). Mass flowrate and composition data for the rich streams are given in Table 4.6 (El-Halwagi and Manousiouthakis, 1989). Available for the purification are aqueous ammonia (S_1) up to 2.3 kg/s and chilled methanol (S_2). Composition and cost data for the extractants are given in Table 4.7.

Mass transfer of H_2S and CO_2 is governed by the following equilibrium relations:

for rich streams and S_1:

$$y_{H_2S} = 1.45x^1_{H_2S} \qquad y_{CO_2} = 0.35x^1_{CO_2}$$

for rich streams and S_2

$$y_{H_2S} = 0.26x^2_{H_2S} \qquad y_{CO_2} = 0.58x^2_{CO_2}$$

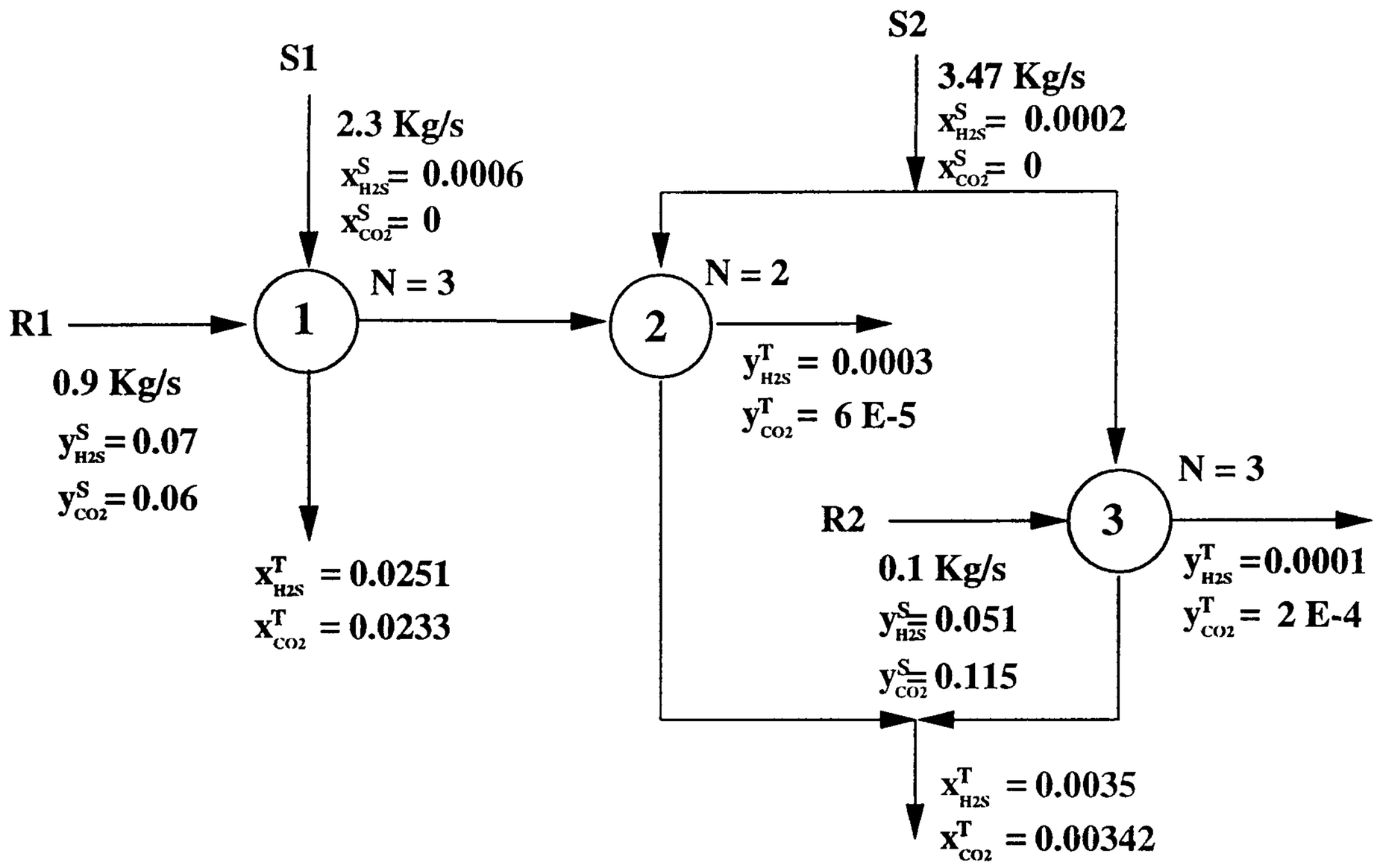

Figure 4.10: Proposed MEN for COG sweetening

Perforated-plate columns are considered for both solvents and a minimum allowable composition difference $\epsilon_{ij} = 0.0001$ is given to ensure feasible mass exchange. The annualized investment cost of such a column is considered \$ 4552 $N_{st}\ yr^{-1}$ (Peters and Timmerhaus, 1981).

The MINLP synthesis model applied for the case of multicomponent targets is developed. It features 165 rows and 131 variables, 4 of which are binary. The proposed mass exchange network is shown in Figure 4.10. It features only three units with an annualized cost of \$ 917880 yr^{-1}, 80% of which corresponds to the cost of MSA's, \$ 881463 yr^{-1}. As it is shown in Figure 4.10 the mass flowrates of S_1 and S_2 are 2.3 Kg/s and 3.47 Kg/s respectively. For comparison purposes, the proposed network by El-Halwagi and Manousiouthakis involves four exchange units, *i.e.* one more, and extended splitting of lean streams (see Figure 4.11), whereas the flowrate of stream S_2 is 0.2242 Kg/s. Although no cost or exchange unit data are provided by these authors, it is obvious that their proposed MEN features a much larger investment cost which might trade-off the MSA consumption. Furthermore, their sequential approach does not take into account that the transferred mass of each component may require exchange units of different size.

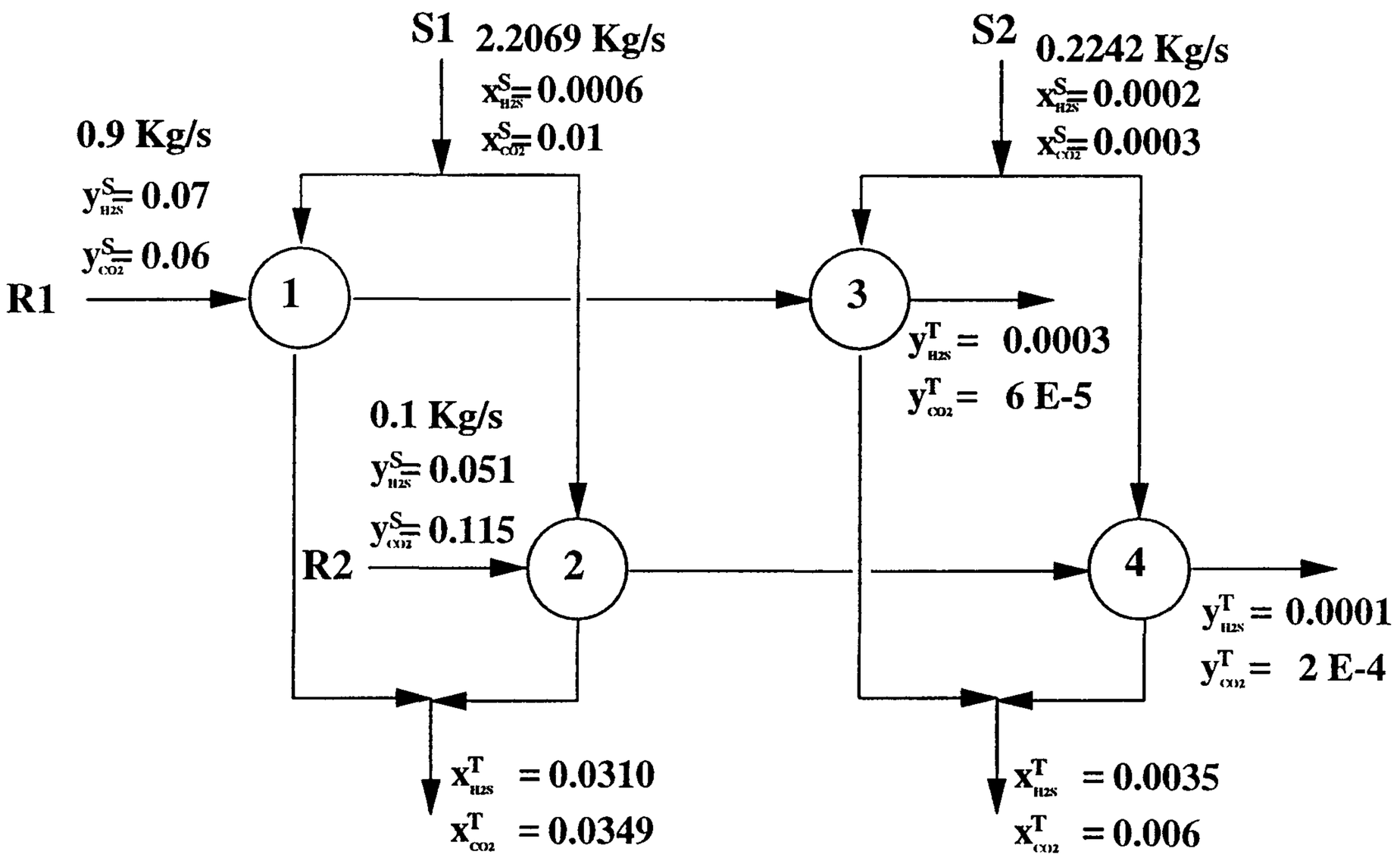

Figure 4.11: MEN for COG sweetening, proposed by El-Halwagi and Manousiouthakis

4.7 Reactive Mass Exchange Networks

Interphase mass transfer is not the only mass transfer mechanism in waste treatment, gas purification etc. Typically the mass separating agent reacts with the components that are removed and equilibrium relations include chemical equilibrium as well. Usually selectivities rather than diffusion constants lead to better separations. When chemical reactions take place, stoichiometric calculations for the reactant species along with chemical equilibrium relations are required in addition to physical equilibrium.

For the case of small composition ranges and isothermal reactions, rich-lean phase equilibrium with respect to a certain component can be expressed through a relation of the form (El-Halwagi and Srinivas, 1992):

$$y^{\star} = f(x^{\star}) \tag{4.1}$$

Such expressions can be obtained through simulation and introduced in the MINLP synthesis model instead of the linear equilibrium relations. The synthesis procedure proposed in this paper remains essentially the same with the complexity of the NLP increased due to and depending on the actual form of eq. (4.1). In Chapter 6, it will be shown how reactive mass exchange can be taken into consideration in process synthesis without the assumption of isothermal reactions and small composition changes.

Example 4.4

For rayon production, cellulose pulp is treated with caustic soda to form alkali cellulose, which then reacts with carbon disulfide to produce cellulose xanthate (see Figure 4.12). This product is dissolved in dilute caustic soda to form a viscous solution, namely viscose syrup. Air is removed from viscose in a vacuum-flash boiling deaerator. The gaseous product of dearetor (R_1) must be cleaned from H_2S before it is discharged to the environment. Rayon fibers are produced from viscose reaction with sulfuric acid liberating H_2S. H_2S must also be removed from the gaseous stream product (R_2) of this reaction. Mass flowrate data and composition specifications for H_2S are given in Table 4.8 (El-Halwagi and Srinivas, 1992). Three MSA's are available for the H_2S removal of R_1 and R_2: caustic soda (S_1), which is a process stream and no cost is associated with

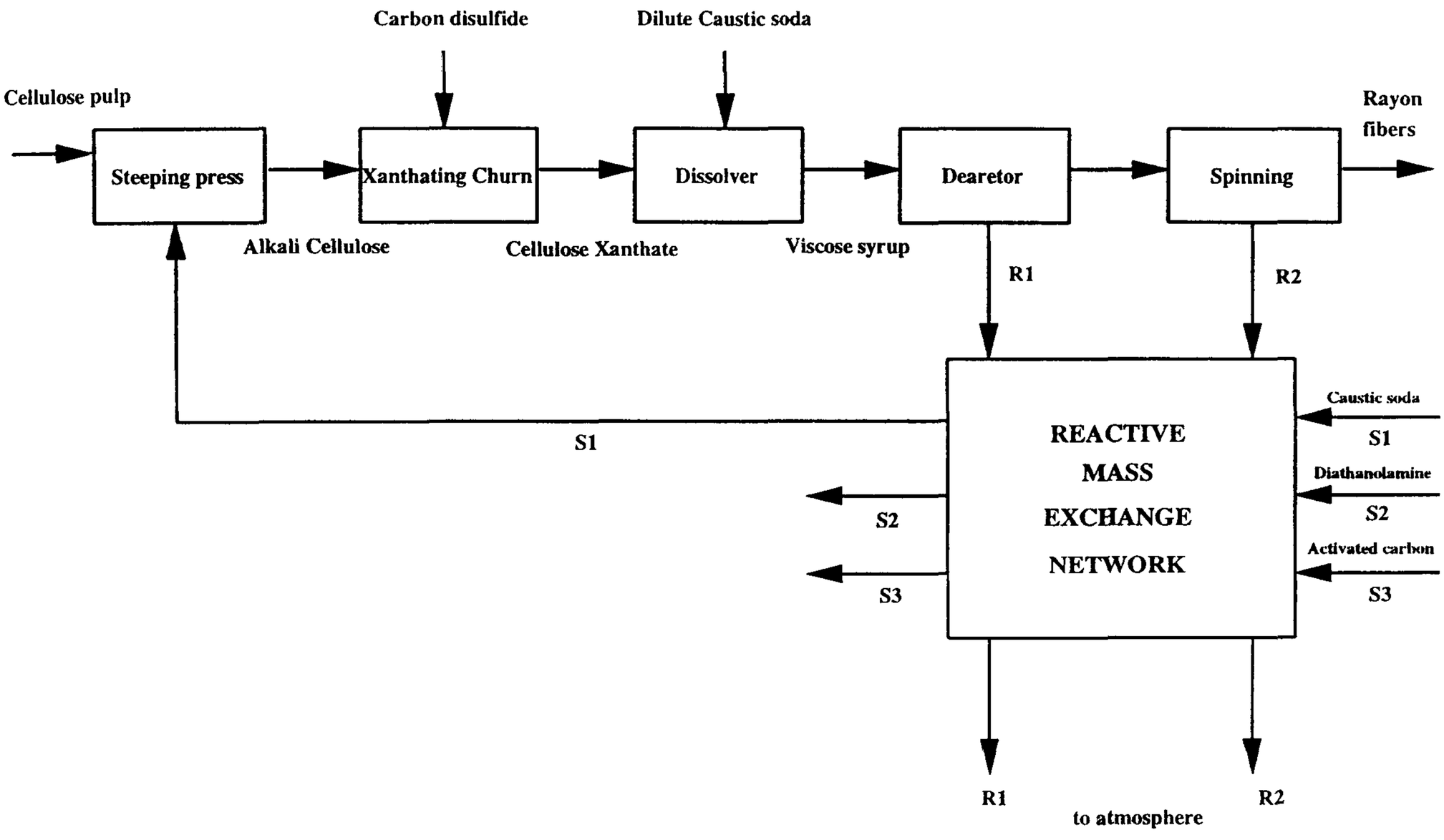

Figure 4.12: Rayon production

it, diethanolamine (S_2) and activated carbon (S_3). Availability, cost and H_2S compositions are given in Table 4.9.

Chemical adsorption is responsible for H_2S removal from caustic soda and diethanolamine. The overall equilibrium for the composition ranges of interest is found to be governed by the following relations:

$$y = 1.945.10^{-9}\ 10^{0.529x_1}$$

$$y = 7.7545.10^{-4}\ x_2^2$$

Absorption of H_2S from activated carbon is represented by the following equilibrium:

$$y = 0.0015x_3$$

Minimum allowable composition differences are given for both the rich and lean streams in Table 4.10. Feasibility constraints are of the form:

Stream No.	Description	G_i (m^3/s)	y_i^s $(kmol/m^3)$	y_i^t $(kmol/m^3)$
R_1	dearetor product	0.87	$1.3\ 10^{-5}$	$2.2\ 10^{-7}$
R_2	acid gaseous stream	0.1	$0.9\ 10^{-5}$	$2.2\ 10^{-7}$

Table 4.8: Rich streams in reactive mass-exchange network.

Stream No.	Description	L_j^{up} (m^3/s)	x_j^s $(kmol/m^3)$	$x_j^{t,up}$ $(kmol/m^3)$	Cost $(\$/m^3)$	Ann. cost $(\$s/m^3yr)$
S_1	caustic soda	$2.0\ 10^{-4}$	0	$2.2\ 10^{-7}$	0	0
S_2	diethanolamine	∞	$2\ 10^{-6}$	$1\ 10^{-3}$	64.9	$8.80833\ 10^8$
S_3	active carbon	∞	$1\ 10^{-6}$	$3\ 10^{-6}$	169.4	$9.94039\ 10^8$

Table 4.9: Lean streams in reactive mass-exchange network.

$$y_i - \epsilon_i^r \geq f^{eq}(x_j + \epsilon_j^l)$$

The potential adsorbers and absorbers are considered to be packed columns. The associated annualized investment cost is considered proportional to their height (see Appendix G): $C = \$\ 9500\ H\ yr^{-1}$.

The MINLP synthesis model is developed, including the above feasibility constraints. The model features 147 rows, 127 variables (6 of which are binary) and 158 non-linear terms. The obtained network is illustrated in Figure 4.13. Both wastestreams are desulfurized with caustic soda ($1.197.10^{-4}\ m^3/s$) up to equilibrium and then purified by active carbon ($11.312.10^{-3}\ m^3/s$). The total annualized cost of this network is $\$\ 1.12735.10^7\ yr^{-1}$, of which $\$\ 1.12454.10^7\ yr^{-1}$ is

Stream	ϵ
R_1	10^{-7}
R_2	$1.5.10^{-7}$
S_1	3.5
S_2	0.014
S_3	10^{-6}

Table 4.10: Minimum allowable composition differences.

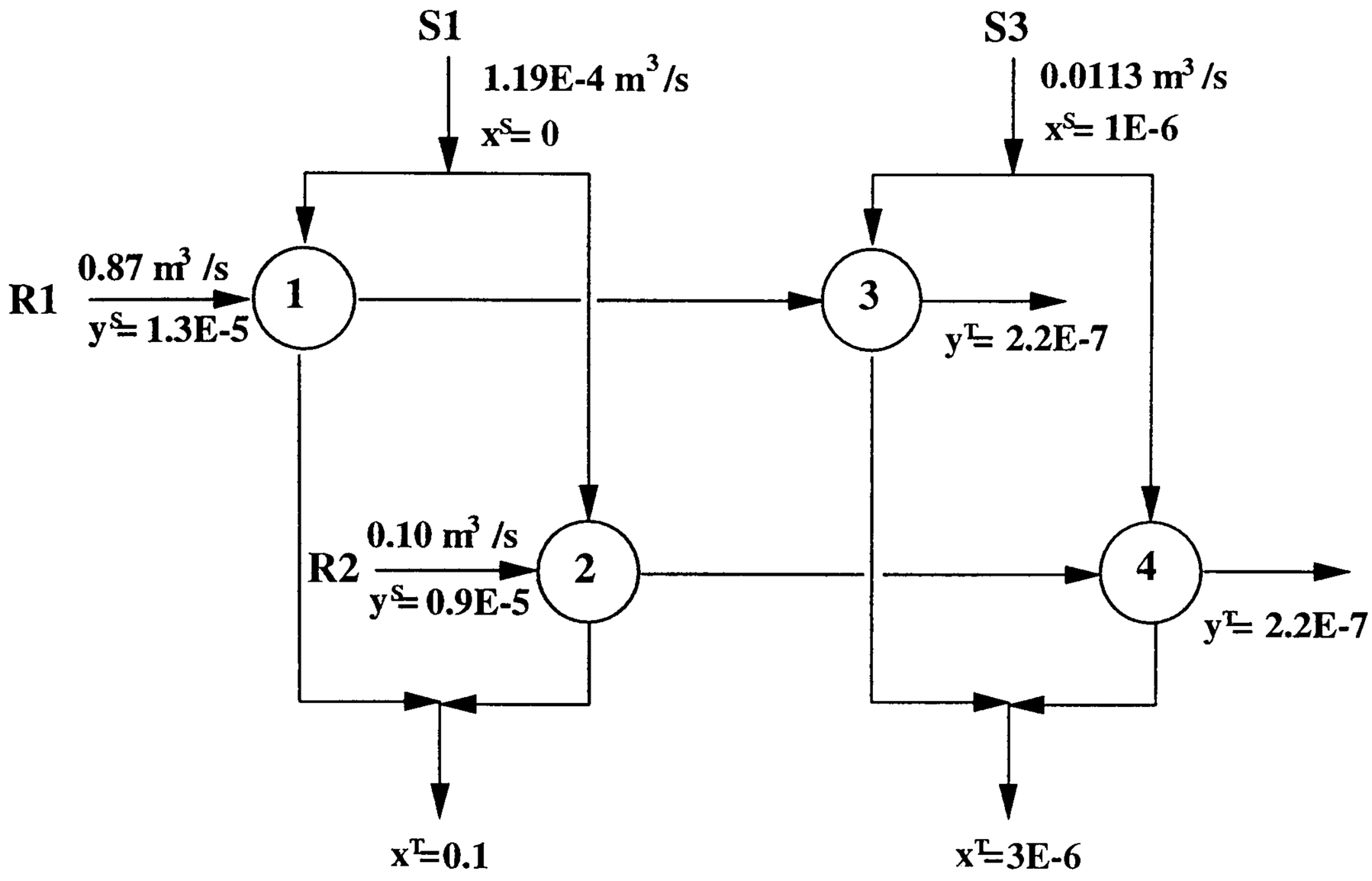

Figure 4.13: Proposed reactive mass-exchange network

the cost of the MSA's. One must note here that since the operating cost is dominant (due to the given cost of active carbon) the network is similar to the one obtained by the sequential approach (El-Halwagi and Srinivas, 1992).

4.8 Summary

A simultaneous (*i.e.* without decomposition) approach, based on an MINLP model, has been proposed in this chapter for the synthesis of mass exchange networks. The model is based on a hyperstructure representation of all mass exchange alternatives, including regeneration of lean streams, as result from the more general mass/heat exchange hyperstructure, introduced in Chapter 1. Operating and capital cost are optimized simultaneously.

The proposed approach for the synthesis of MEN can be employed in waste minimization and purification processes providing a systematic method for synthesizing waste treatment and solvent recovery systems at the minimum overall cost. Heat integration has not been considered here.

Although the approach has been extended to reactive mass exchange, the considered reactions are assumed isothermal. In the next chapters a unified approach will be proposed to address the synthesis of energy efficient processes that involve mass transfer and separation tasks.

Chapter 5

Flexibility Aspects in the Synthesis of Mass and Heat Integrated Processes

Heat integration aspects are introduced to the synthesis of mass exchange networks in this chapter and a unified hyperstructure representation of heat exchange and isothermal mass exchange alternatives is employed. Flexibility aspects are also addressed.

5.1 Introduction

Mass exchange networks provide a cost-effective alternative in waste management, metal recovery etc., when trade-offs between operating and capital investment cost are properly exploited. The mass exchange network hyperstructure, described in Chapter 5, including all structural and operational alternatives for MENs, allows for a simultaneous optimization of a total annualized cost. Economical optimality, however, depends only partly on nominal operation. The inability of a mass integrated waste treatment system to satisfy environmental specifications due to process variability may lead to significant economic and environmental losses. Uncertainty aspects in the synthesis of mass exchange networks can be addressed through the framework for flexibility proposed in Chapter 2. The MEN hyperstructure can be extended to the multiperiod case, while a feasibility analysis step can be applied to identify critical operating conditions that would violate design or environmental specifications. These critical operating conditions define periods of operation based on which the multiperiod synthesis model is developed. Flexible and cost-optimal mass integrated systems result through iterating between a feasibility analysis and a multiperiod synthesis step

(see Figure 5.1). Moreover, heat integration aspects can be addressed simultaneously with mass integration in order to exploit even further operational and structural alternatives for cost-optimal treatment systems.

5.2 Synthesis of Flexible Mass/Heat Integrated Networks

An integrated hyperstructure for heat and mass exchange networks result from mass/heat exchanger hyperstructure representation framework, when mass/heat exchange blocks operate isothermally (see Figure 5.2). The basic characteristics of this integrated hyperstructure representation are:

- Each mass and/or heat exchange match corresponds to an exchanger unit. All mass and heat exchange matches are postulated beforehand, but they are not considered fixed. Multiple mass and heat exchange between two streams is taken into account. The maximum number of mass and/or heat exchangers between two streams is determined by the heat and/or mass requirements of the two streams and the corresponding temperature and/or composition difference, respectively.

- Each stream entering the network is split towards all the possible heat and mass exchange units. An overall bypass is considered for each process stream to increase the flexibility of the network.

- Prior to each mass exchanger a mixer is considered for each stream, where bypasses from all the other exchangers of the stream and the initial splitter are merged to a flow towards the exchanger. The same holds for each heat exchange unit.

- After each mass exchanger a splitter is considered for each stream, from which potential flows are driven towards the final mixer of the stream and the other (mass and heat) exchangers of the stream. The same holds for each heat exchanger.

- A bypass is considered for each stream in each mass exchanger to increase the flexibility of the mass exchange. Also at each side of a heat exchanger (in case of process streams only) a bypass stream is considered.

The following assumptions are made:

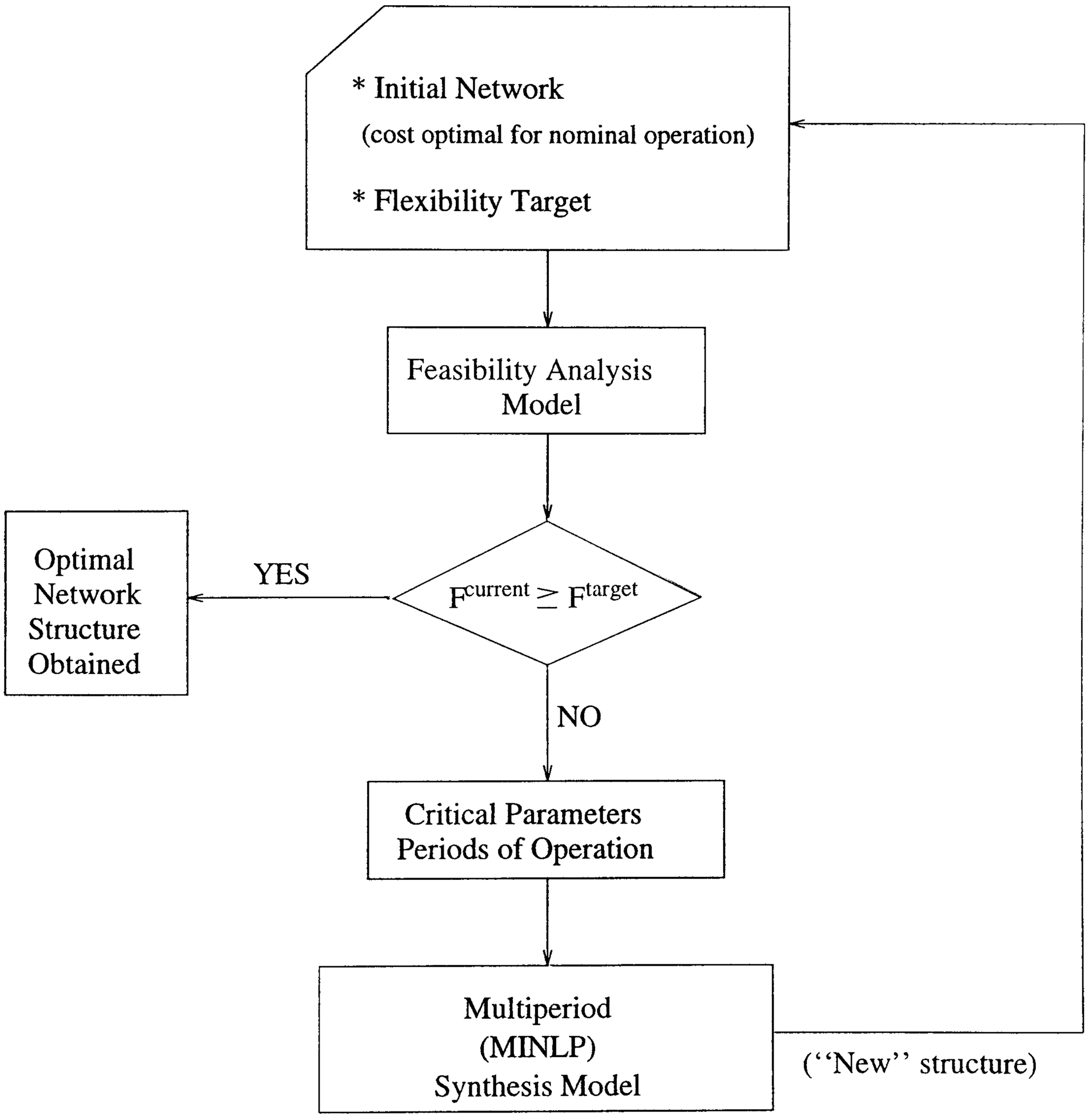

Figure 5.1: Synthesis of Flexible Mass Integrated Networks

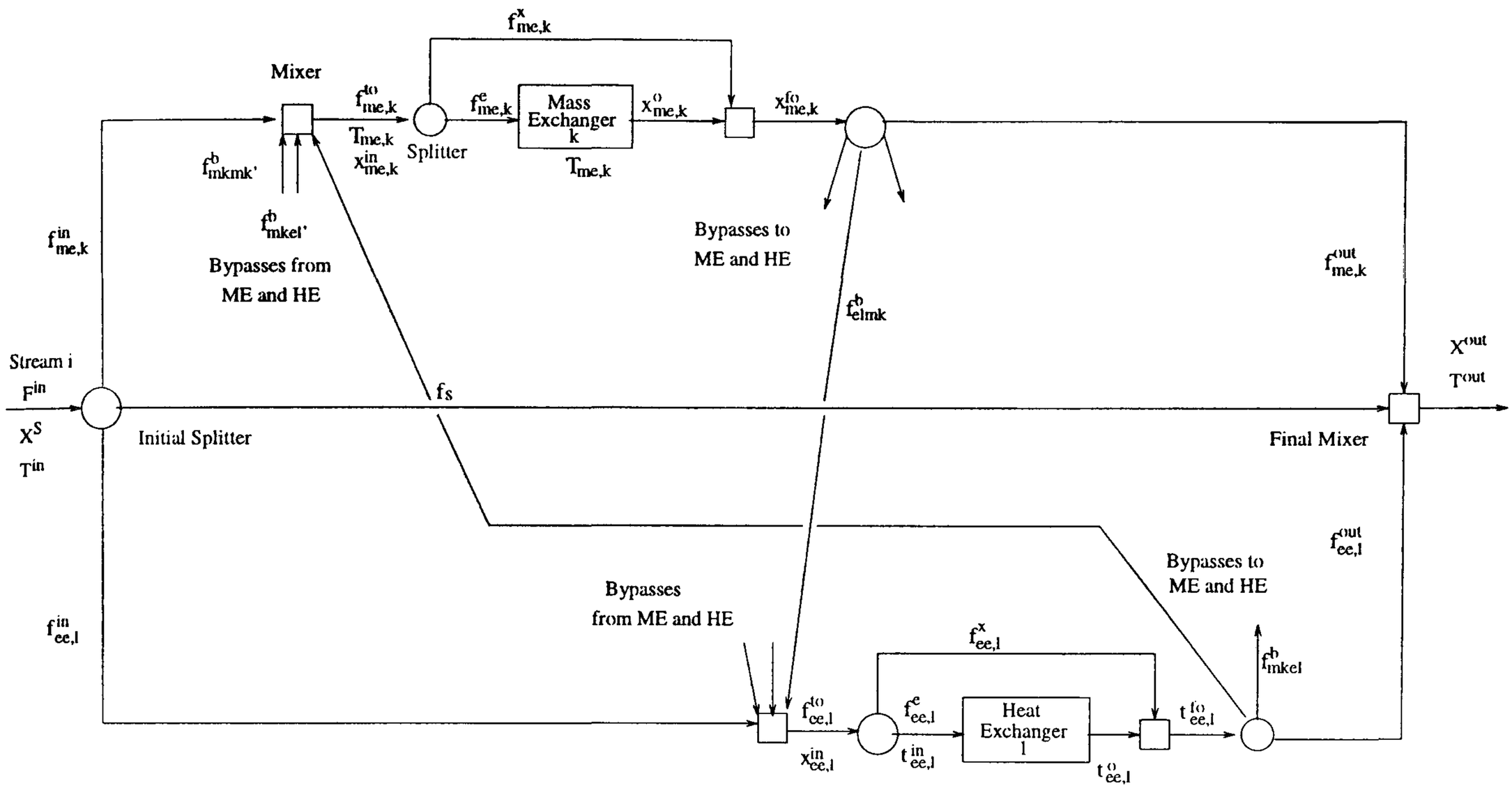

Figure 5.2: Multiperiod Hyperstructure for Heat and Mass Exchange Networks

1. The heat and mass transfer are separable, *i.e.* they do not take place within the same exchanger (isothermal mass transfer).

2. Each possible mass exchange is considered to take place at the given temperature of greatest efficiency.

3. Either only heating or cooling is considered for the rich and lean streams; *i.e.* these streams can be characterized as hot or cold, depending on their initial and final (bounds) temperatures.

4. No rich-rich or lean-lean mass exchange matches are allowed.

5. No hot-hot cold-cold heat exchange matches are allowed.

6. Heat capacities and heat transfer coefficients are not a function of temperature.

7. Heat and mass exchange are of the counter-current type.

8. The network operates under constant pressure.

Assumptions (1) and (2) refer to isothermal mass exchange. Non-isothermal mass exchange or distillation alternatives are addressed in Chapter 6. Assumption (3) concerns the heat exchange

behaviour of the rich, lean and regenerating streams; these streams cannot exchange heat with hot and cold streams. Heat capacities of the streams (assumption 6) are only a function of their composition and possibly period of operation (when the heat capacity of each component involves discretized uncertainty). The same holds for the heat transfer coefficients of the streams. Finally assumption (8) refers to constant operating pressure, so that mass transfer equilibria are well defined. These assumptions (6-8) are relaxed in Chapter 6.

When multiperiod operation is taken into account, stream flows, compositions and temperatures, as well as mass and heat loads of each exchanger are defined as continuous variables for each period of operation. Design variables, such as heat exchanger areas, number of stages etc., are defined as continuous variables for all periods of operation. Structural variables, corresponding to binary variables are also defined for all periods of operation.

The multiperiod synthesis model consists of (i) mass and energy balances, (ii) constraints that ensure feasible mass and heat transfer, (iii) design constraints, (iv) logical mixed integer constraints, that connect continuous variables with structural variables, (v) pure integer constraints, that express the connectivity and logic of the network (*e.g.* an inlet pipe to an exchanger does not exist if the exchanger does not exist) and (vi) an objective function, where a total annualized cost is minimized. The model is formulated as MINLP and decomposition techniques (*e.g.* Generalized Benders decomposition) may be employed for its solution.

5.3 Examples

Example 5.1

Consider copper recovery in an etching plant that has been described in Example 4.1 (see Figure 4.2). The plant involves two rich streams in copper that must be purified up to concentrations dictated by environmental regulations and process economics. Two extractants are proposed for copper recovery, LIX63 (an aliphatic α-hydroxyoxime, S_1) and P_1 (an aromatic β-hydroxyoxime, S_2). Mass flowrate data and concentration specifications are given in Table 5.1. Due to variations in operation of the etching line, the mass flowrate of the spent etchant varies:

$$0.25\ Kg/sec \leq G_{R1} \leq 0.5\ Kg/sec$$

Copper mass transfer takes places at constant temperature and pressure. At the specified

Stream No.	Description	G_i (Kg/s)	y_i^s	y_i^t	Ann. Cost $(\$/(kg/sec)yr)$
R_1	amm.solution	0.25	0.13	0.1	
R_2	rinsewater	0.1	0.06	0.02	
S_1	LIX63		0.03	0.07	58680
S_2	P_1		0.001	0.02	704160

Table 5.1: Streams of copper recovery problem

temperature the copper transfer between the given rich and lean streams, within the ranges of copper concentration of interest, is governed by the following linear equilibrium relations:

$R_1 - S_1$: $y_1^\star = 0.734x_1^\star + 0.001$

$R_2 - S_1$: $y_1^\star = 0.734x_1^\star + 0.001$

$R_1 - S_2$: $y_1^\star = 0.111x_2^\star + 0.008$

$R_2 - S_2$: $y_2^\star = 0.148x_2^\star + 0.013$

where $y_1^\star$, $y_2^\star$ and $x_1^\star$, $x_2^\star$ are the copper concentrations of R_1, R_2 and S_1, S_2, respectively, at equilibrium.

The multiperiod mass exchange hyperstructure is developed for two periods of operation, defined by the extreme values of G_{R1}. Perforated-plate columns are considered for the coper transfer and the number of required equilibrium stages is considered to be given by the Kremser equation:

$$N_{st} = \ln((1 - \frac{mG}{L})\frac{(y^{in} - mx^{in} - b)}{(y^{out} - mx^{in} - b)} + \frac{mG}{L})/(\ln(\frac{mG}{L}))$$

The cost of a perforated-plate column is assumed proportional to the number of equilibrium stages and is given by $4552N_{st}$ $\$/yr$ (Peters and Timmerhaus, 1981). Piping cost is considered to be $\$$ 10000/ pipe yr, to avoid extensive stream splitting. The multiperiod synthesis model, considering only the mass exchange alternatives features 399 rows and 273 variables, of which 48 are binary. The model was solved in 12 GBD iterations, consuming approximately 164 CPU seconds on a SPARC-10 workstation. The obtained mass exchange network for copper recovery is illustrated in Figure 5.3. It features 3 mass exchangers in series and a total annualized cost of $TAC = \$\ 170234\ /yr$, with $\$\ 142922\ /yr$ corresponding to operating cost.

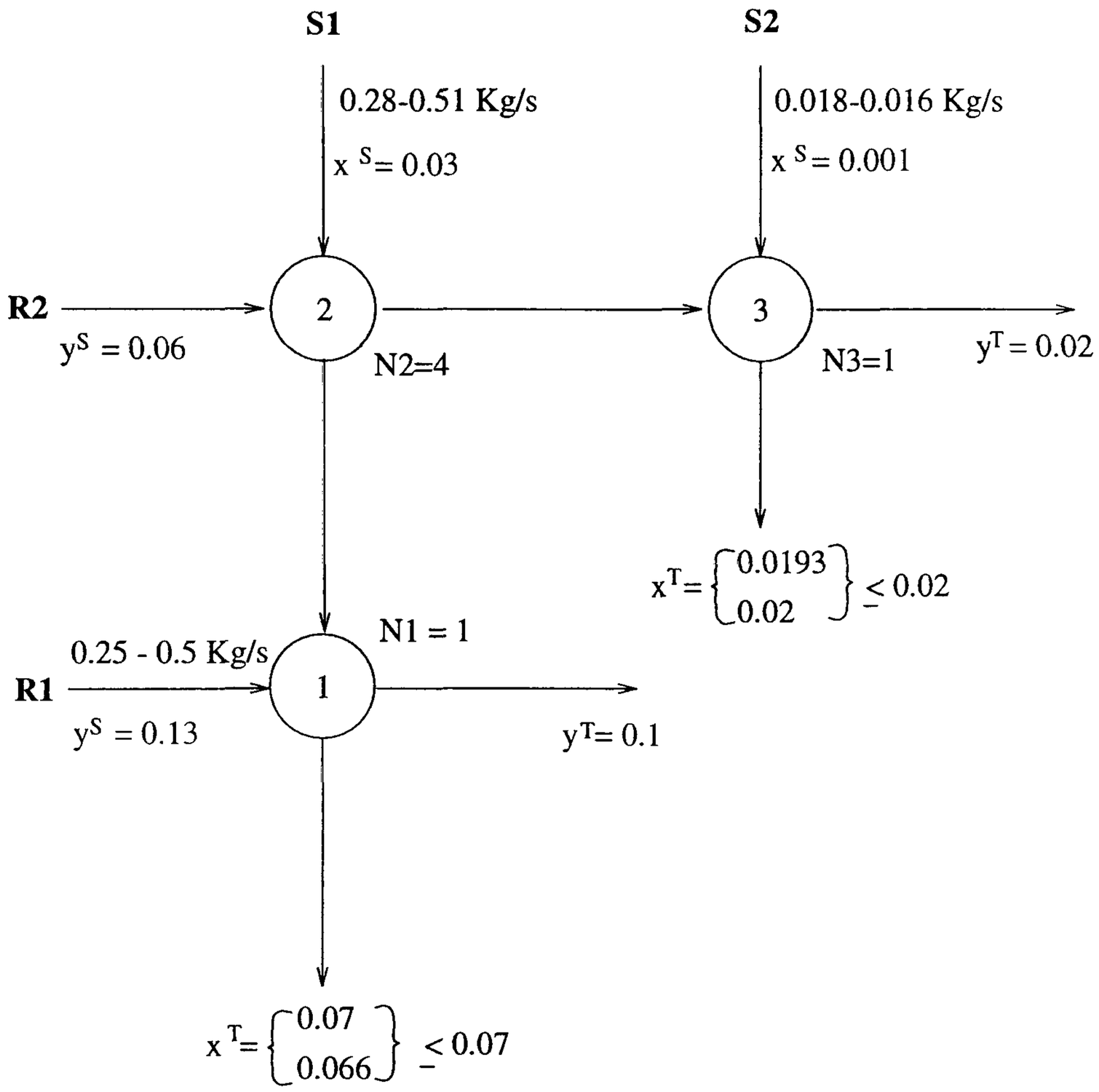

Figure 5.3: Proposed MEN for flexible coper recovery

A flexibility analysis (Grossmann and Floudas, 1987) of the proposed MEN reveals that it is *flexible* to operate in the whole uncertainty range of G_{R1}.

Example 5.2

An example where heat and mass integration can be considered simultaneously is the recovery of acetone from an air mixture (Douglas, 1988; Ciric and Jia, 1991). The synthesis of an acetone recovery system is of interest, where the air mixture is purified up to 98% and acetone is recovered in a product stream of 99% concentration. The recovery system should be flexible to operate for two different acetone flows, given in Table 5.2. A number of separation alternatives can be considered for the air mixture, as condensation, absorption, adsorption, membrane separation or reaction, which in principle can be incorporated within the proposed synthesis model. To simplify the

Stream		Flowrate (lbmol/hr)	Acetone concentration	Temperature (^oF)
Air mixture	air	687		
		697.3-707	0.01478-0.0283	77
	acetone	10.3 - 20		
Air Product		$\leq 687.206 - 687.4$	$\leq 0.00029 - 0.00058$	77
Acetone product			≥ 0.99	77
Water effluent			≤ 0.05	77

Table 5.2: Stream data and specifications for acetone recovery.

separation problem and because the acetone concentration is small, we assume that air scrubbing with water would be the most economical choice.

The acetone removal takes place at 77^oF and well-water is used as pure solvent. The liquid effluent from the air scrubber is then distilled to an almost pure acetone stream ($\geq$ 99%) and a water effluent which undergoes biochemical treatment and released to the environment. This water stream can also be recycled and reused in the air scrubber. The acetone product is cooled and sold.

The separation alternatives that are considered are depicted in Figure 5.4. We consider all feed possibilities for the absorber (clean water, water recycle). Also heat integration options between the distillation feed, condenser and recycle stream are considered. To account for a comprehensive total annualized cost, the distillation cost (capital investment and utility cost at the condenser and reboiler) is also considered. The overall cost comprises:

- cost of pure water solvent.
- cost of cooling water (available at $67^oF - 120^oF$)
- cost of steam (available at 382^oF and 200 psi)
- losses and profit from acetone
- capital cost of absorber
- capital cost of distillation column

- capital cost of exchangers

The annualization of the operating cost is based on a 8150 hr/yr working time.

To simplify distillation optimization we consider saturated liquid feed, saturated vapour overhead and saturated liquid bottom product of variable concentration and temperature and constant atmospheric pressure.

Temperature data and concentration specifications are given in Table 5.2. The equilibrium at the air scrubber is governed by:

$$y^{eq} = 2.02x^{eq}$$

where y^{eq} is the acetone concentration in the air mixture and x^{eq} in the water mixture. We assume ideal gas behaviour at the distillation column and evaluate relative volatilities through Antoine equations for acetone and water as a function of temperature. Also heat capacities and enthalpies of the acetone-water mixture are calculated on the basis of an ideal mixture assumption.

The Kremser equation is employed for the design of the air scrubber, whereas Fenske and Underwood equations (Douglas, 1988) are used to calculate the minimum number of equilibrium stages N_m and the minimum reflux ratio R_m at the column (see Figure 5.4 for notation).

$$N_m = \frac{ln((\frac{Xap}{(1-Xap)})(\frac{Xar}{(1-Xar)}))}{ln\alpha}$$

$$R_m = (\frac{1}{\alpha - 1})(\frac{Xap}{Xf} - \frac{\alpha(1-Xp)}{1-Xf})$$

We assume that the actual number of trays is double the minimum and that the reflux ratio is 1.2 times the minimum one. Cost data are given in Table 5.3.

The multiperiod synthesis model is considered for the alternatives illustrated in Figure 5.4 and for two periods of operation, defined by the acetone flowrates. These alternatives result straightforwardly from the mass/heat hyperstructure of Figure 5.2.

The proposed acetone recovery system is depicted in Figure 5.5. It features a total annualized cost of $TAC = \$1040143/yr$, whereas the profit form acetone retail is $\$\ 1765896/yr$. Cost results are given in Table 5.4.

One can note that the water effluent of the distillation column is recycled and reused in the absorber. Thus, the operating cost of the absorber is reduced (a small water make-up is

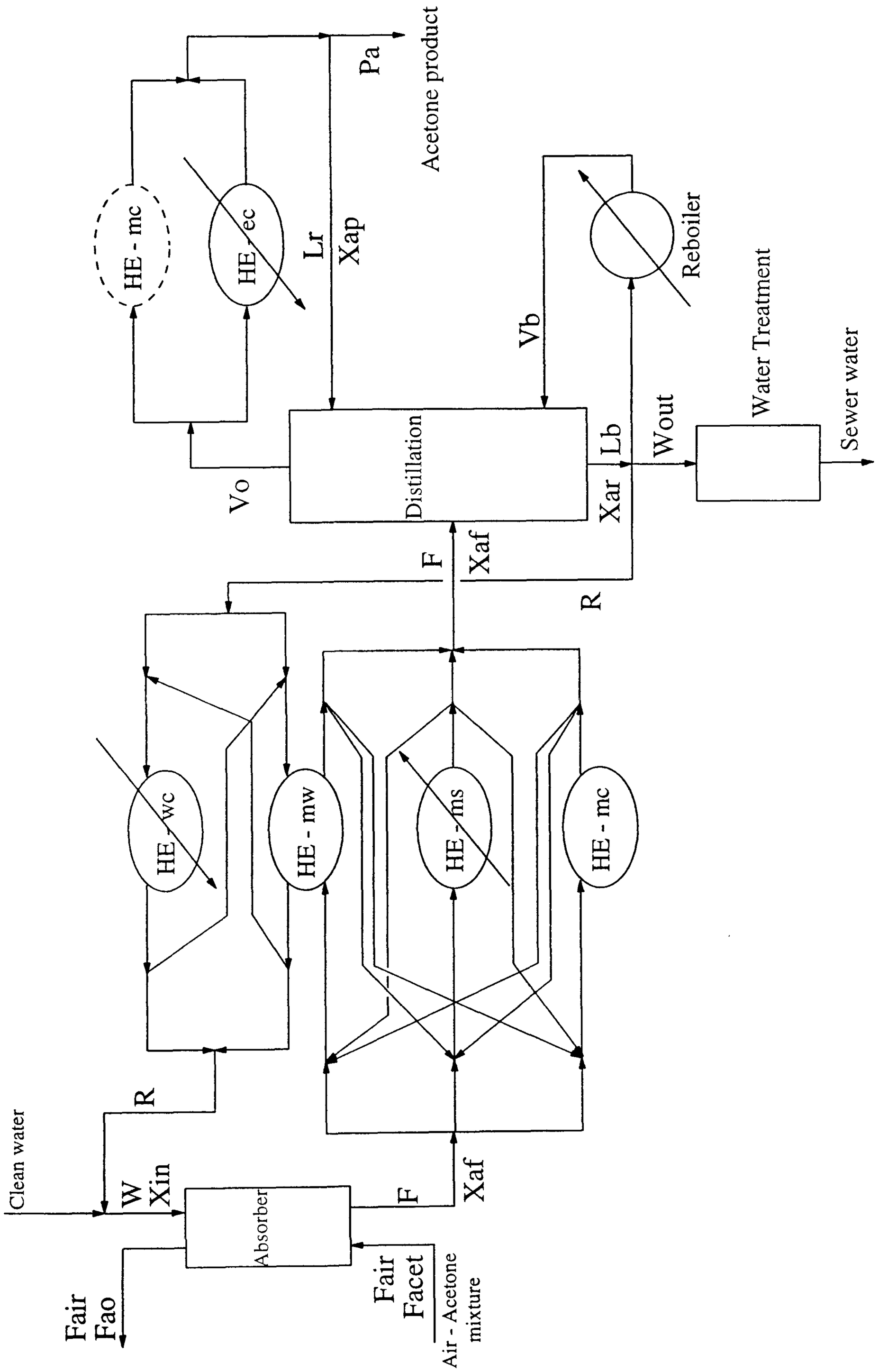

Figure 5.4: Considered alternatives in acetone example

	Cost
Steam	$\$\ 0.0031843/lb$
Water	$\$\ 0.000622667/lb$
Acetone	$\$\ 18.058/lbmol$
Biotreatment	$\$\ 16.72/lbmol\ acetone$
Exchanger	$\$\ 329.9(A\ in\ ft^2)^{0.6}\ /yr$
Absorber	$\$\ 980.2N_{st}/yr$
Column	$C_{sh}N_T^{0.8}V^{0.5}$
Shell cost, C_{sh}	$C_o(\text{Weight})^{0.6}$
Diameter	$6\ ft$
Density	$490\ lb/ft^3$
C_o	$\$\ 217.7/yr$

Table 5.3: Cost data for acetone recovery.

	Cost ($\$\ /yr$)
Steam	191693.4
Water	33581.5
Acetone loss	17837.3
	243112.2
Areas	129760.7
Absorber	29596.2
Dist. column	637673.5
	797030.4

Table 5.4: Annualized costs.

Stream	Flowrate $(lbmol/hr)$	Concentration	Temperature (^oF)
f1	1274.275 - 1102.736	0.007 - 0.013	77
f2	230.992 - 423.685	0.007 - 0.013	77
f3	1274.275 - 313.225	0.007 - 0.013	191.7 - 206.7
f4	0 - 789.512	0.007 - 0.013	191.7 - 206.7
f5	1505.267 - 736.91	0.007 - 0.013	211.5 - 215
F	1505.267 - 1526.422	0.007 - 0.013	211.5 - 210.6 (**Tf**)
r1	284.499 - 289.075	0	124 - 124.3
r2	1210.468 - 1217.346	0	212.4
r3	763.719 - 841.156	0	91 - 94
r4	446.749 - 376.190	0	91 - 94
R	1494.967 - 1596.422	0	77

Table 5.5: Stream flows in Acetone Recovery.

added) and the biotreatment option is rejected. The hot recycle stream is integrated with the distillation feed and further cooled, whereas the liquid product of the absorber is heated up to its saturation temperature. Design parameters (areas, number of trays) are given in Table 5.6. Flowrate, concentration and temperature results are given in Table 5.5. Note that flow f_4 of the water-acetone mixture (see Figure 5.5) only exists in the second period of operation.

5.4 Summary

The iterative framework for flexibility proposed in Chapter 2 has been employed in this chapter for the synthesis of heat integrated isothermal mass exchange processes. As illustrated with the example problems, through the simultaneous optimization of operating and capital investment cost, the trade-offs between mass and heat integration alternatives are fully exploited. The proposed approach can incorporate further operability considerations and requirements (*e.g.* structural controllability, dynamic aspects etc.).

In Part IV the mass and heat hyperstructure concept will be extended to represent process synthesis alternatives in general.

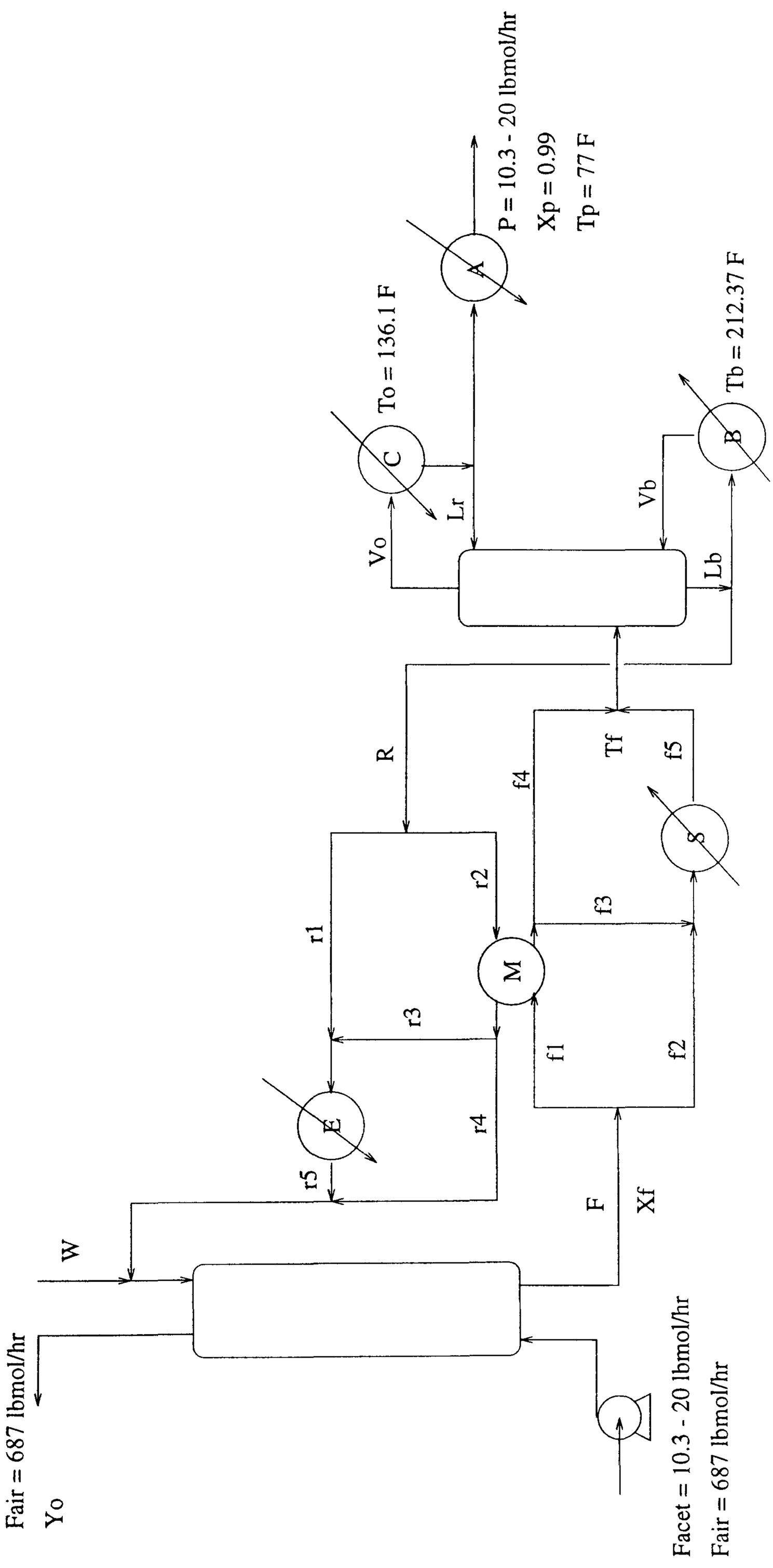

Figure 5.5: Proposed flexible acetone recovery system

Unit	
Areas	
A	27 ft^2
B	606.8 ft^2
C	1873 ft^2
M	2500 ft^2
S	269.5 ft^2
E	2500 ft^2
Absorber	30 stages
Distillation	
Trays	3
Min. reflux ratio	40.1 - 20.2

Table 5.6: Design parameters in acetone recovery.

A General Framework for Process Synthesis

Chapter 6

Mass/Heat Exchange Hyperstructure : A Synthesis Framework

Process synthesis alternatives are explored in this chapter through the mass/heat exchange hyperstructure representation framework. Mass and heat transfer principles (including phase and chemical equilibrium) are utilized to describe unit operations, conventional and/or not (section 6.4). A synthesis framework is developed (section 6.5) to identify favourable process alternative without pre-postulating process units. Example problems are presented from separations, reactor networks, hybrid units and complex HENs.

6.1 Introduction

Mass and heat exchange concepts have been utilized so far, in order to represent synthesis alternatives for mass integrated treatment systems and heat recovery systems respectively. However, process operations, in general, involve mass and heat transfer phenomena, as described in Chapter 1. In this chapter, the generalized mass/heat hyperstructure module, introduced in Chapter 1, will be employed to represent process synthesis alternatives within a general framework for process synthesis.

When process synthesis emerged as a research field, work focussed on employing decomposition and heuristic rules in order to explore systematically synthesis alternatives and determine the optimal unit type and sequencing. Reviews on earlier developments can be found in Hendry et al. (1973) and Nishida et al. (1981). With the development of unit operations, on one hand, that enabled a better understanding of processing tasks and mathematical programming on the other,

two basic approaches have been established to address the process synthesis problem: (i) hierarchical decomposition and evolutionary techniques, based mainly on thermodynamic principles, and (ii) mathematical programming-based methods, where a superstructure of process alternatives is optimized within a mathematical programming framework.

While the synthesis and optimization of subsystems (separation networks, heat exchanger networks, reactor networks) has flourished through the development of corresponding superstructures of alternatives, regarding the synthesis of total flowsheets, Kocis and Grossmann (1989) proposed a generalization of the flowsheet superstructure involving a set of interconnection nodes (splitters and mixers) and a set of unit nodes. The synthesis problem was formulated as a mixed integer nonlinear optimization problem and OA/ER was employed for its solution (Duran and Grossmann, 1986; Kocis and Grossmann, 1987). Towards the same direction, Bagajewicz and Manousiouthakis (1992) introduced a state-space representation of synthesis alternatives, where one can distinguish a stream splitting/mixing block and a process unit block, where process units are either modelled through a superstructure operator, or synthesis tasks are explored employing pinch technology principles. In his review paper, Siirola (1994) employed means-ends analysis and evolution techniques for systematically generating process synthesis alternatives. Starting from the initial state of raw materials towards the final product state, property differences are exploited in a hierarchical way to specify corrective tasks that should eliminate these differences (*i.e.* chemical reaction to change chemical identity, separation to change concentration and purity). Recently, Rigg and Swaney (1994) proposed a unified network representation for separation systems, based on key thermodynamic states involved in the process. Counter-current mass contactors are considered between pairs of states, pinched at one end. Going beyond the evaluation stage of synthesis alternatives, Friedler et al. (1993) established a method for obtaining the "maximal" structure (superstructure) of all possible feasible alternatives for a process synthesis task, assuming a given set of process units to be considered.

However, synthesis of entire flowsheets to-date has been governed by an implicit assignment of processing tasks to processing equipment through a pre-postulation of a set of unit operations within a superstructure realization of synthesis alternatives. Hence, the derived flowsheets are limited by typical flowsheet patterns, that follow more or less the traditional hierarchical design guidelines. Hybrid process units and non-conventional process structures, that recently are proven favourable in the industry, are only studied within an algorithmic superstructure-based approach when pre-postulated (Ciric and Gu, 1994). The synthesis framework proposed in this chapter,

attempts to overcome this limitation employing fundamental mass/heat transfer principles within a hyperstructure environment that exploits modelling concepts from the well-defined HEN and MEN problems.

6.2 Synthesis Problem

The synthesis problem that is addressed in this paper can be stated as follows:

Given are:

- A set of existing process streams to be used as raw materials, an upper bound on their flowrates, supply temperatures and compositions.
- A set of desired products and specifications on their flowrates, outlet temperatures and compositions.
- Available heat and/or mass utility streams, such as steam, cooling water, active carbon etc., specifications on their availability (flowrate bounds), supply temperatures and compositions.
- Physical property and cost data.

Then, *the objective is* to synthesize a process network, consisting of process units, such as distillation columns, reactors, reactive distillations (non-equilibrium or not) etc., that is able to satisfy the process specifications on the desired products and availability of utilities, optimizing a performance criterion, usually of economic nature (*e.g.* operating or total annualized cost).

It is assumed that the available technology for the production of the desired products is known, eg. the chemistry (kinetics, intermediates, byproducts), solvents with increased solubilities etc. If for example aromatic hydrocarbons are to be recovered from an aromatic/paraffinic/naphthenic mixture, a number of extractive solvents, such as dimethyl-formamide (DMF) or N-methylpyrolidone, is given.

In the sequel, the multipurpose mass/heat transfer block introduced in Chapter 1, will be utilized to describe process operations defined by the type of mass and heat transfer phenomena and the substances that are involved in them.

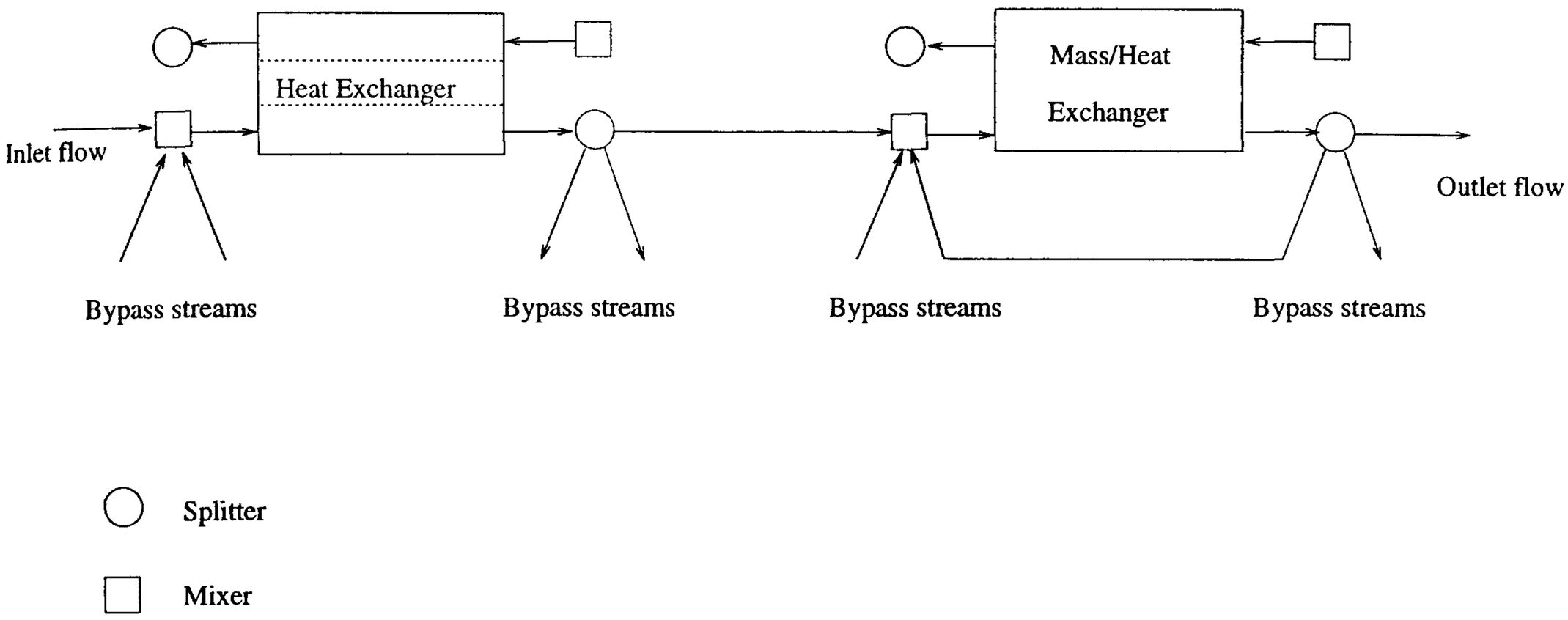

Figure 6.1: Multipurpose Mass/Heat Exchange Hyperstructure Module

6.3 Multipurpose Mass/Heat Transfer Module

The two-exchange block module (see Figure 6.1) introduced in Chapter 1, can form the building block to describe mass/heat transfer process operations within a process system, when the streams that participate in mass and heat exchange blocks are properly defined.

The streams that appear in process operations to participate in mass/heat transfer are of different phase or of different (chemical) potential/composition. *A stream is defined in this framework by its phase* (vapour, liquid, organic, immiscible organic etc.) *and a qualitative indication of its composition* (pure component, mixture of components, mixture rich in a specific component etc.). For example, in the distillation of a binary mixture AB, the streams participating in the corresponding mass/heat transfer phenomena are: a liquid and a vapour stream rich in A($L_{A(B)}$ and $V_{A(B)}$ respectively) and a liquid and a vapour stream rich in B ($L_{(A)B}$ and $V_{(A)B}$).

The mass and heat transfer in process operations take place between streams of different *potential*, which can be realized between different, immiscible phases or in reactions (chemical potential), with the driving force for the mass transfer being a function of stream composition, temperature and pressure. Hence, *mass/heat transfer stream matches are considered between streams of different phase and between reagent/product streams when reactions are possible.* For example, in the

distillation of a binary mixture AB, A (the most volatile component) is transferred from the liquid to the vapour phase of a mixture stream that contains mostly A (denoted as $L_{A(B)}$ and $V_{A(B)}$) and mixture that contains mostly B ($L_{(A)B} \rightarrow V_{(A)B}$); *i.e.* mass/heat transfer is realized in stream matches $L_{A(B)} - V_{A(B)}$ and $L_{(A)B} - V_{(A)B}$. In both stream matches the concentration of the liquid stream in A is reduced, thus the liquid streams act as the "rich" sides in mass transfer, whereas the vapour streams act as the "lean" sides. If reaction is also possible within AB towards a product C in the liquid phase, this could be realized as transfer of C from a stream that contains mostly A, B to a stream that has the potential to increase its concentration in C ("lean" in C) or contains mostly C ($L_{AB(C)} \rightarrow L_{(AB)C}$). In addition, the following matches are considered: $L_{A(BC)} - V_{A(BC)}$, $L_{AB(C)} - V_{AB(C)}$ and $L_{(AB)C} - V_{(AB)C}$.

Based on the above definitions of streams and stream matches, within this framework, a network hyperstructure is developed, assigning side mixers and splitters to each exchange block (see Figure 6.1) and considering all stream interconnections between exchangers. An initial splitter is also considered for each existing stream and a final mixer for each possible existing, intermediate and final stream.

An assumption is made, that at the mixers prior to each side of potential exchanger units and final mixers only stream flows of the *same* phase are merged. No phase change (flash operations) takes place at mixers. This can occur in the adjacent exchanger blocks; in this case the exchanger inlet temperature is at most the mixture boiling point or at least the mixture dew point (in general phase properties cannot take values beyond the phase critical property values, resulting in phase-defining constraints). The mixing assumption can be relaxed to cover the case of liquid-vapour streams (defining a separate stream type).

The mass/heat exchange hyperstructure is mainly described by mass and energy balances and thermodynamic constraints that ensure the existence of a driving force for mass/heat transfer. In particular:

- **Stream Splitters** at the network inlet of each existing stream and after the outlet of each exchanger side are described by mass balances for the total stream flows.

- **Stream Mixers** (at the inlet of each exchanger side and the network outlet of each stream) are described by mass balances for the total stream flows and each component separately, phase defining constraints (depending on the phase of the stream defining the adjacent ex-

changer or product stream) and energy balances.

- **Pure Heat Exchangers** are described by energy balances, phase-defining constraints at the exchanger outlets and driving force constraints for heat transfer. The feasibility of heat transfer is ensured by a minimum positive temperature difference between the hot and the cold streams at the inlet and the outlet of the exchanger. In the case of vapour stream exchangers the transferred heat includes the possible vapourization/condensation enthalpy.

- **Mass/Heat Exchangers** are described by mass balances for each component, energy balance, phase-defining constraints and feasibility constraints for mass transfer. The mass transfer vector involves a generation/consumption term (reaction) and a pure mass transfer term, while reaction enthalpies are taken into account in the energy balance. The driving force for the mass transfer is a function of component concentrations, corresponding either to chemical potential difference (reaction) or phase-change driving force (phase equilibrium).

6.4 Representation of Process Units

Based on the generalized network hyperstructure, process units can result as combinations of heat and mass/heat transfer blocks. For example:

6.4.a Distillation

Consider the separation of a mixture stream AB into two products: A(B) (rich in A) and (A)B (rich in B), where A and B may be sets of components with descending volatility.

A distillation column for the separation involves mass and heat transfer between the liquid and vapour mixtures $L_{A(B)} - V_{A(B)}$ and $L_{(A)B} - V_{(A)B}$. Hence, it can be realized as two mass/heat exchange units (see Figure 6.2) connected to a condenser and a reboiler (pure heat exchangers).

Exchanger LA(B)-VA(B) corresponds to the upper part of the column (stripper), where the vapour stream is enriched in the most volatile component A, thus A is transferred from the liquid stream LA(B) ("rich" in A) to the vapour stream VA(B) ("lean" in A, since its concentration is increased).

Exchanger L(A)B-V(A)B corresponds to the lower part of the column (rectifier), where the

liquid stream is enriched in the heavier component, thus B is transferred from the vapour stream V(A)B ("rich" in B) to the liquid stream L(A)B ("lean" in B), or equivalently A is transferred from L(A)B ("rich" in A) to V(A)B ("lean" in A).

A heat exchanger VA(B)-C, where C is a cold stream or a cooling utility, acts as a condenser when phase-defining constraints, based on thermodynamic properties, are considered at the inlet (vapour phase) and the outlet (liquid phase) of the exchanger. Similarly, a heat exchanger H-V(A)B, where H is a hot stream or heating utility, acts as a reboiler when ensuring liquid phase at the mixer outlet prior to the exchanger and vapour phase at the exchanger outlet. When liquid-vapour mixture streams are considered, a partial reboiler and a partial condenser may be defined similarly. In this case thermodynamic properties are constrained within the limits that characterize a mixture stream while boil-up and condensation ratios are variables.

Bypass streams as shown in Figure 6.2 are required from the lean side (in terms of A) of the lower part to the lean side of the upper part and from the rich side of the upper part to the rich side of the lower part, and from and to the condenser and the reboiler.

Complex columns with more than one feed and more than one products (side strippers etc.) can be included as alternatives within the hyperstructure if multiple mass/heat exchange is considered between the liquid and the vapour streams of the upper and the lower parts of the column. In this case the distillation column can be actually realized as a set of trays (corresponding to mass/heat exchange modules) and more involved distillation models can be employed.

6.4.b Homogeneous Reaction

A homogeneous reactor can be realized as a mass/heat exchanger between the reagent mixture ("rich" in chemical potential and thus "rich" in reaction product) and the reaction product mixture (where product concentration is increased, thus "lean" in reactor product).

Considering the reaction in the liquid phase:

$$A + B \longrightarrow C$$

a reactor would result as a mass/heat exchanger between $L_{AB(C)}$ and $L_{(AB)C}$ (see Figure 6.3). Since the reaction takes place in one phase, only one inlet and outlet must be present. A recycle

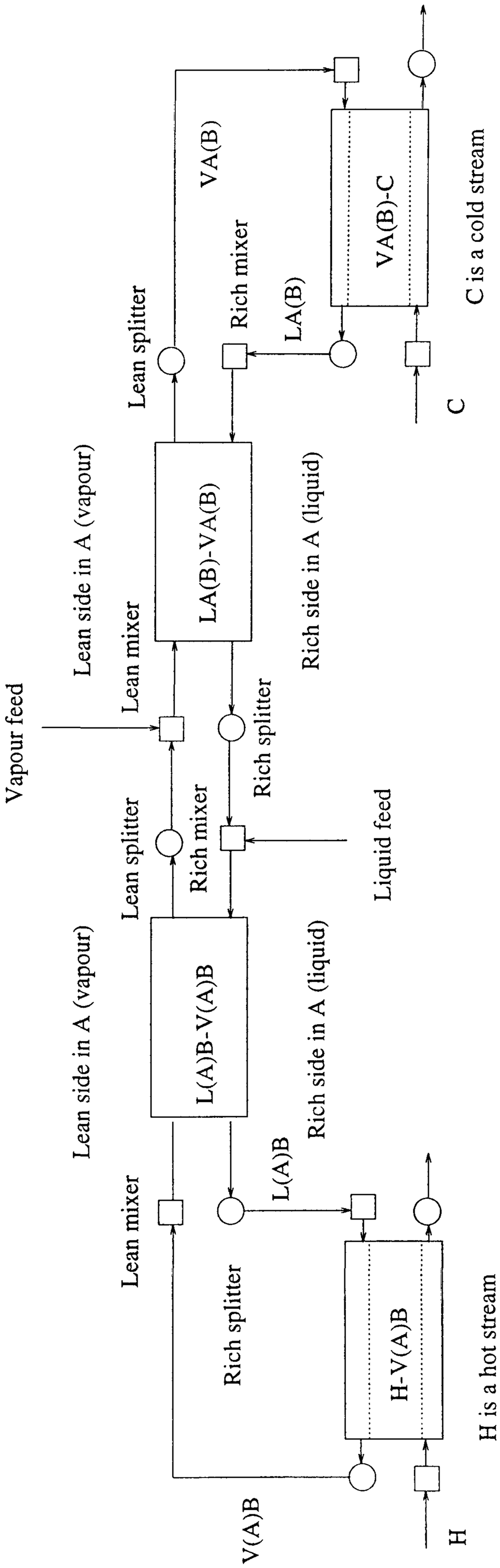

Figure 6.2: Distillation Column

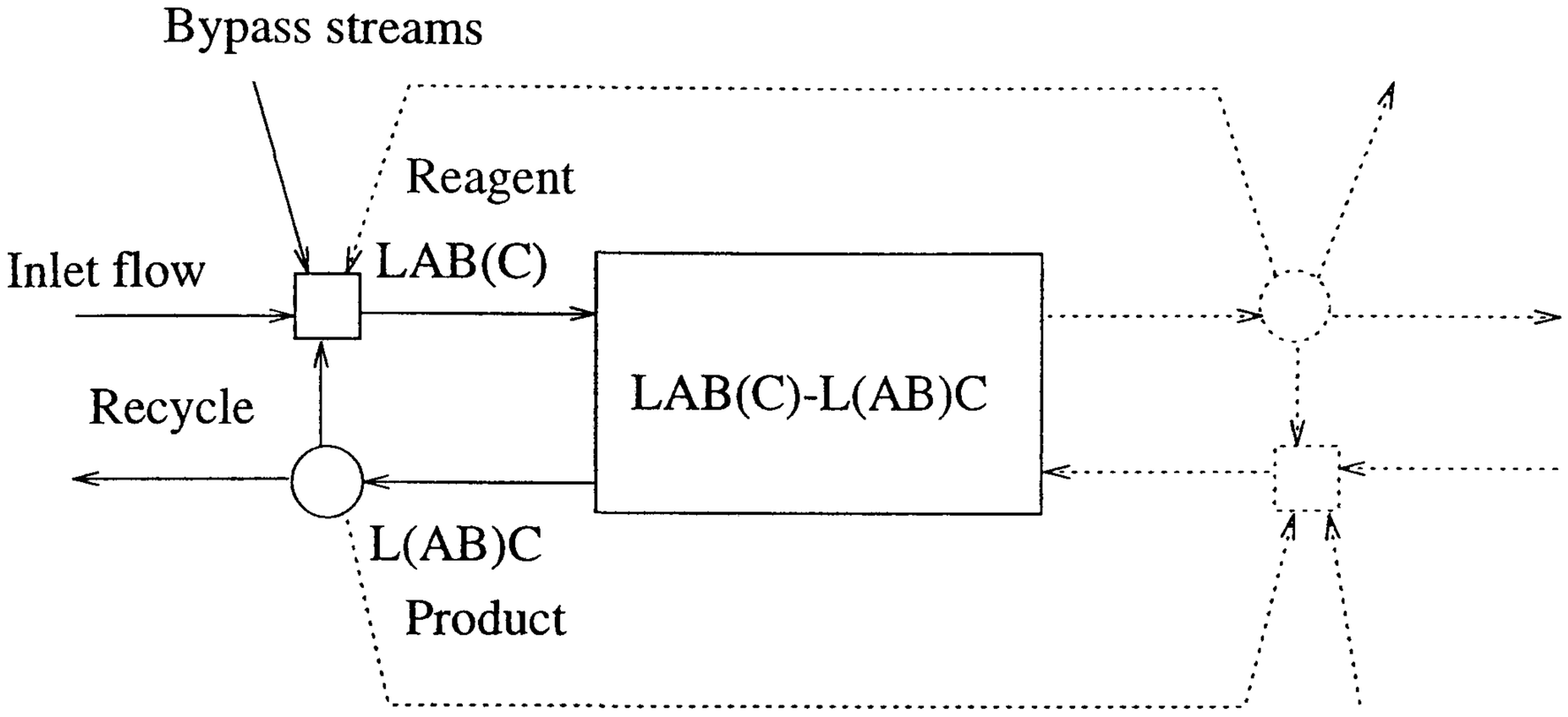

Figure 6.3: Homogeneous Reactor

stream would correspond to the bypass flow from the splitter after the lean-product outlet to the mixer prior to the rich-reagent inlet (see Figure 6.3). If the product stream exchanges heat with a cooling utility and there are not other bypass flows out of the lean side, a jacketed reactor may be realized (as in Figure 6.4).

One mass/heat exchanger representing a homogeneous reacting system would correspond to a continuous stirred tank reactor (CSTR), since implicitly we assume that the two mass/heat exchanging streams are well mixed in order to define reaction kinetics. A plug-flow reactor (PFR) can be realized as a "battery" of mass/heat exchanger units. Any other flow pattern and mixing scheme in a reactor will result through the interconnections of multiple mass/heat exchange units of the same stream match. It must be noted that when only homogeneous reacting streams are considered, the mass/heat exchange hyperstructure results in the non-isothermal reactor network superstructure proposed by Kokossis and Floudas (1994).

6.4.c Two-phase Reaction

Two phase reaction can be realized as mass/heat exchange between the two phases involved. The lean side is defined by the stream/phase the concentration of which in the component of interest is increased. Both reactants and reaction products are considered present in each phase. Mass transfer between the two streams is now governed by chemical and phase equilibrium. Since the

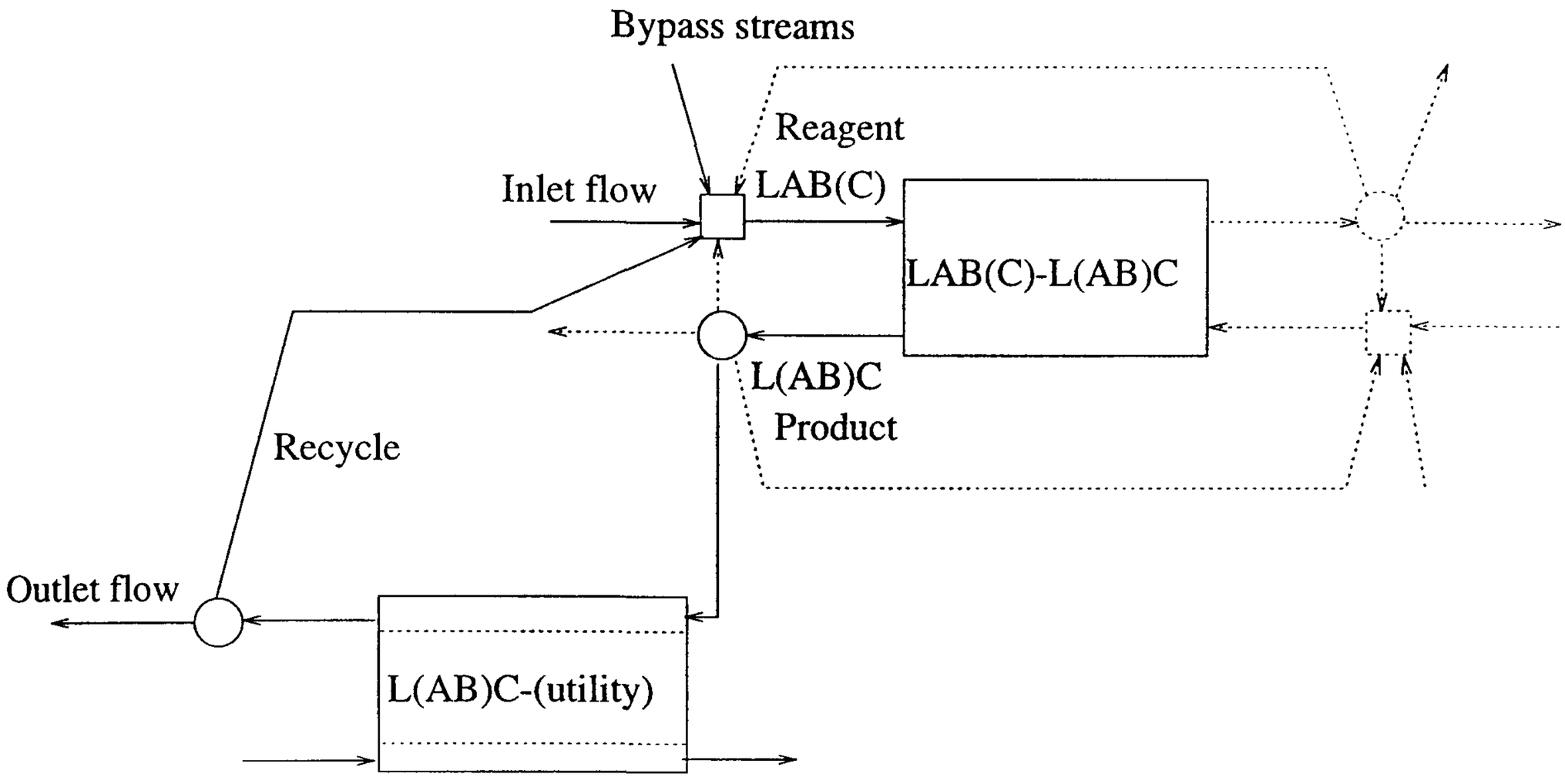

Figure 6.4: Jacketed Homogeneous Reactor

two phases are immiscible, recycle streams are considered from each side splitter to the mixer prior to the same exchanger side, as illustrated in Figure 6.5.

6.4.d Absorption/Extraction

An absorber and/or an extractor is actually a mass/heat exchange block, where a set of components (and heat possibly) are transferred between two immiscible phases (not of the same streams as in distillation). Mass transfer is governed by equilibrium of the two immiscible phases and distribution of the components of interest. Both units are represented by a single (or a set of, if detailed models are to be employed) mass/heat exchange modules.

6.4.e Reactive Distillation

Reactive distillation can be realized similarly to conventional distillation, as a set of two or more mass/heat exchange units between liquid-vapour streams. Note that in this case, the mass exchanging streams correspond to the reacting systems, and those have already been accounted for as intermediate streams and alternative matches. Mass transfer is again governed by phase and

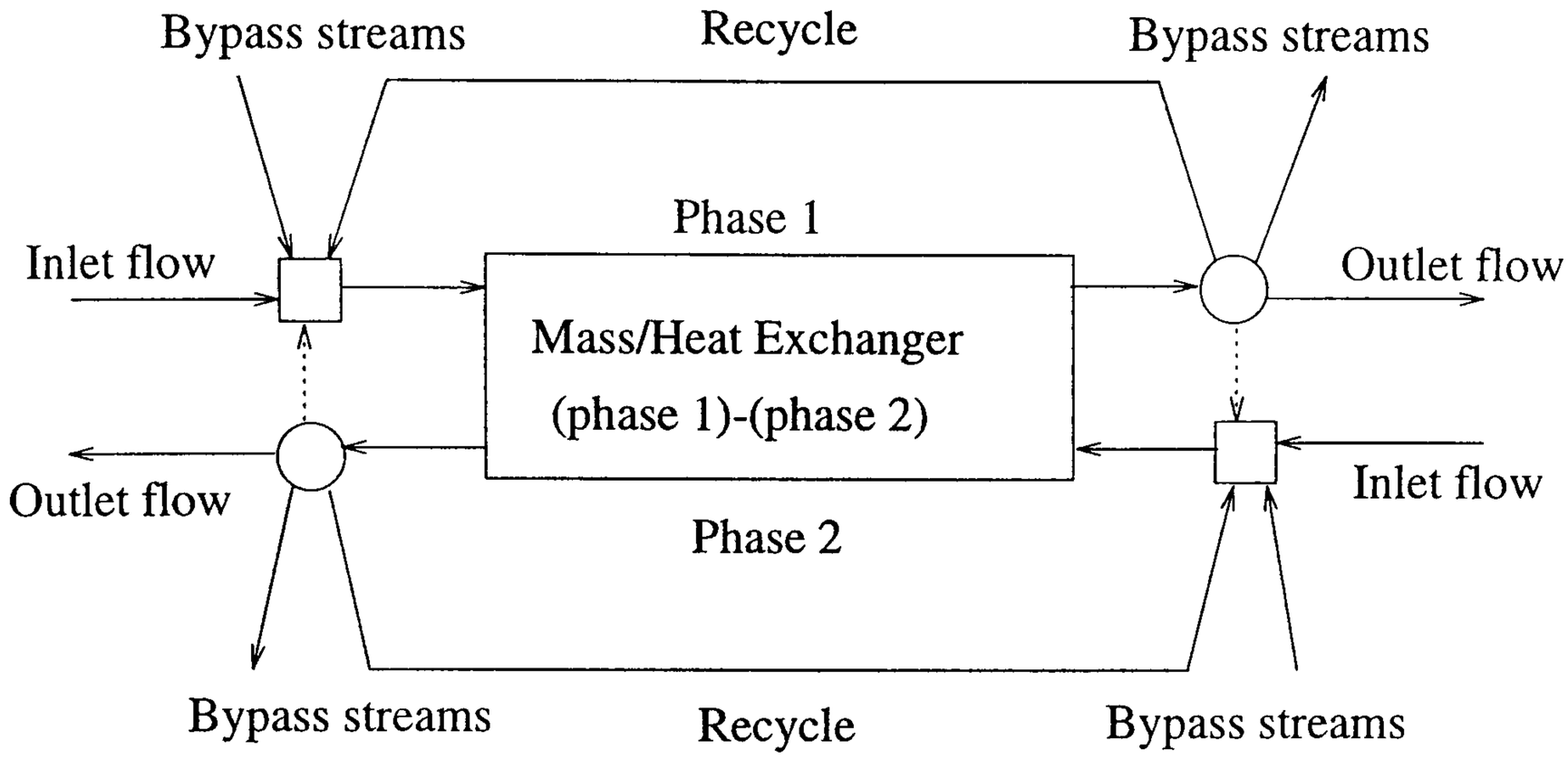

Figure 6.5: Two-Phase Reaction

chemical equilibrium. Multiple feeds and products and side heating and/or cooling can be modelled by considering multiple mass/heat exchange between the liquid and the vapour of the reacting system.

Consider for example the production of C from A and B according to the following reversible reaction:

$$A + B \leftrightarrows C + D$$

where D is the most volatile component, while C is the least volatile. Within the proposed modelling framework, based on the above information, the following streams are considered:

$$L_{AB(CD)}\ ,\ V_{AB(CD)}\ ,\ L_{(ABC)D}\ ,\ V_{(ABC)D}\ ,\ L_{(AB)C(D)}\ ,\ V_{(AB)C(D)}\ ,\ \text{etc.}$$

and all the possible matches in between them, *i.e.* Liquid-Vapour matches of the same stream, Liquid-Liquid etc. Depending on the synthesis objective, alternative process structures featuring different operating conditions may result from the mass/heat exchange module hyperstructure, *e.g.*: (i) the reaction taking place in the liquid phase up to equilibrium and then A, B and D are separated from C (see Figure 6.6), (ii) the reaction taking place in the liquid holdup of the trays of a distillation column, with D being removed to the vapour phase and chemical equilibrium shifted to the right (see Figure 6.7).

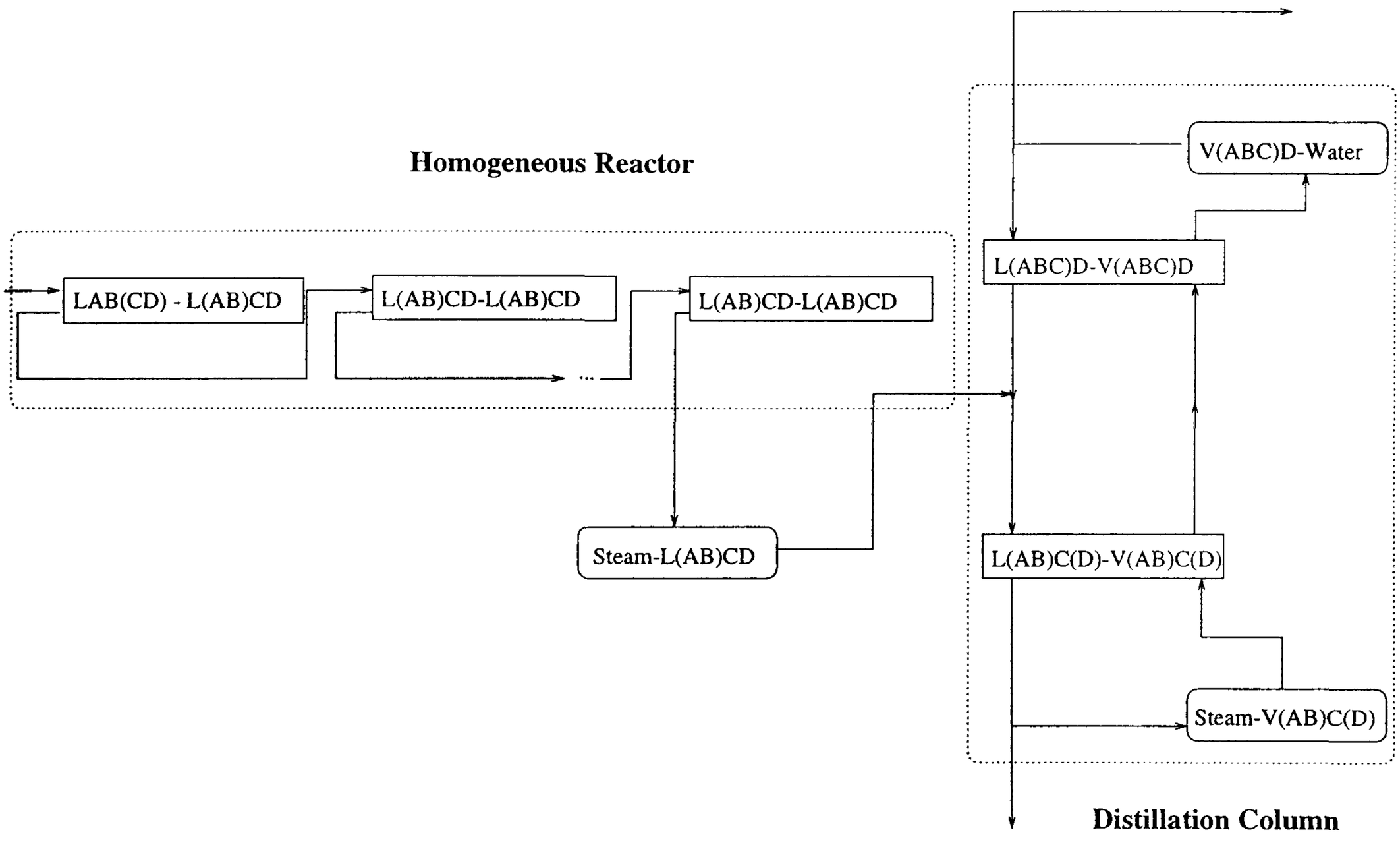

Figure 6.6: Production of C from A and B - Alternative I

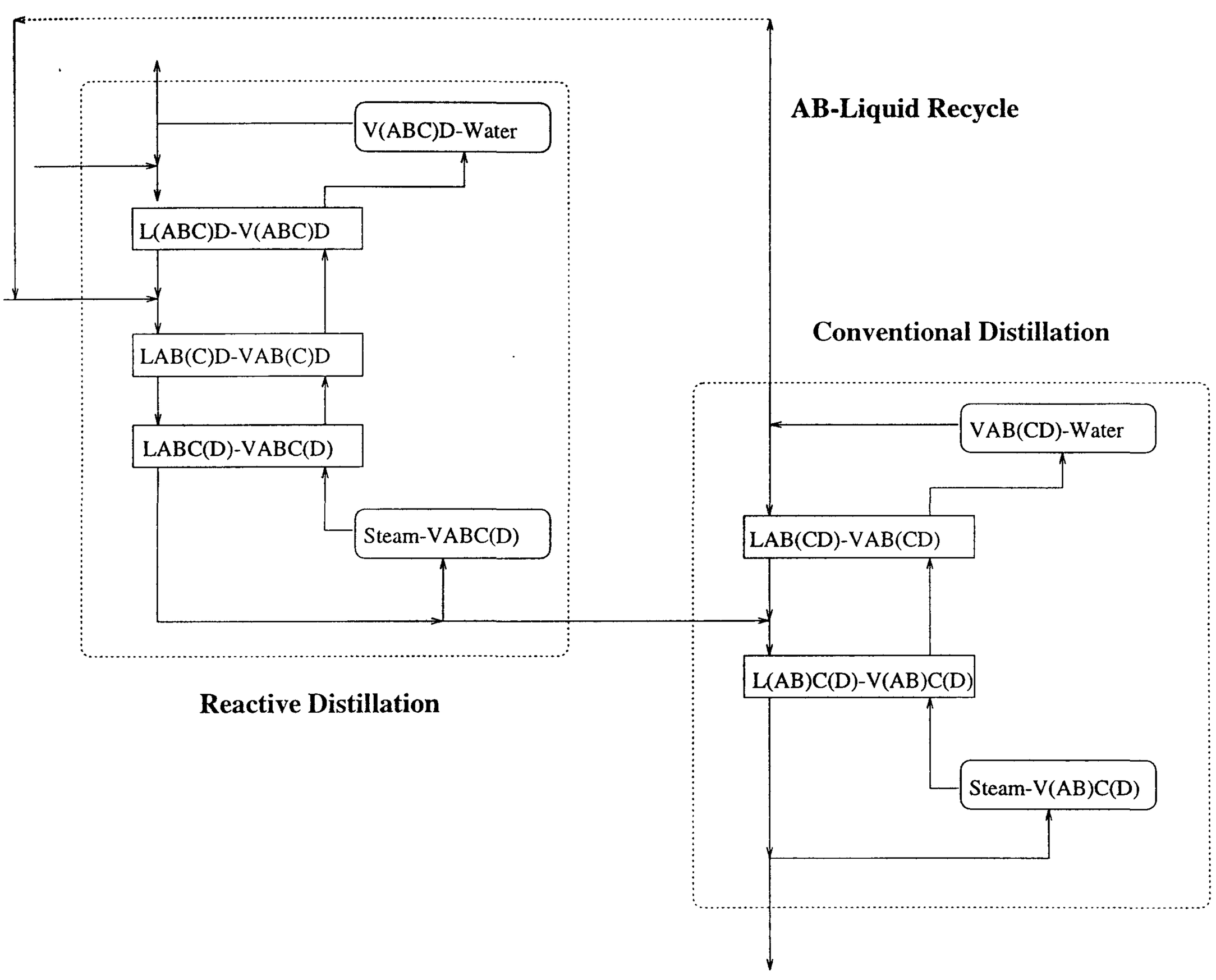

Figure 6.7: Production of C from A and B - Alternative II

6.5 Synthesis Framework

The generalized mass/heat transfer network hyperstructure can represent systematically and in a unified way process alternatives, as shown in the previous sections. A synthesis framework based on this representation scheme, where one would start from the synthesis with the aim to obtain an optimal process network , should involve (see Figure 6.8):

- Construction of a stream superset, which includes *all the initial and desired process streams, as well as the intermediate streams that can result, based on the available knowledge on physico-chemical trends.* In general, if limited information is available on intermediate streams or many components are present, one mixture stream may be considered, containing all possible components (initial, intermediate, etc.) in all possible phases (including immiscible organic/inorganic phases).

- Postulation of stream matches. Having defined process streams, *all possible mass/heat transfer matches are considered, defining the heat and mass transfer blocks in the hyperstructure.* In many cases mass/heat transfer between streams may be realized in more than one ways, *e.g.* distillation or reactive distillation. Thus, multiple mass/heat transfer blocks are considered for each stream match. Engineering knowledge may be employed at this stage to fathom out redundant stream matches and reduce problem dimensionality.

- Development of Mass/Heat Exchange Network Hyperstructure, considering all possible interconnections between the stream splitters and mixers.

- Optimization of mass/heat exchange hyperstructure. Here, conventional mixed integer nonlinear programming techniques or coupled with logic-based optimization (Raman and Grossmann, 1993) can be employed for the solution of the resulting large-scale optimization problem.

Process synthesis is usually driven by the minimization of a cost function. Operating cost can be straightforwardly accounted for in the hyperstructure model, since it corresponds to raw material and utility consumption. Capital cost, however, corresponds to equipment cost and cannot be readily incorporated, since process units are not considered. Capital cost can be approximated through "hybrid" capital cost functions based on operating conditions of processing tasks, *e.g.* the

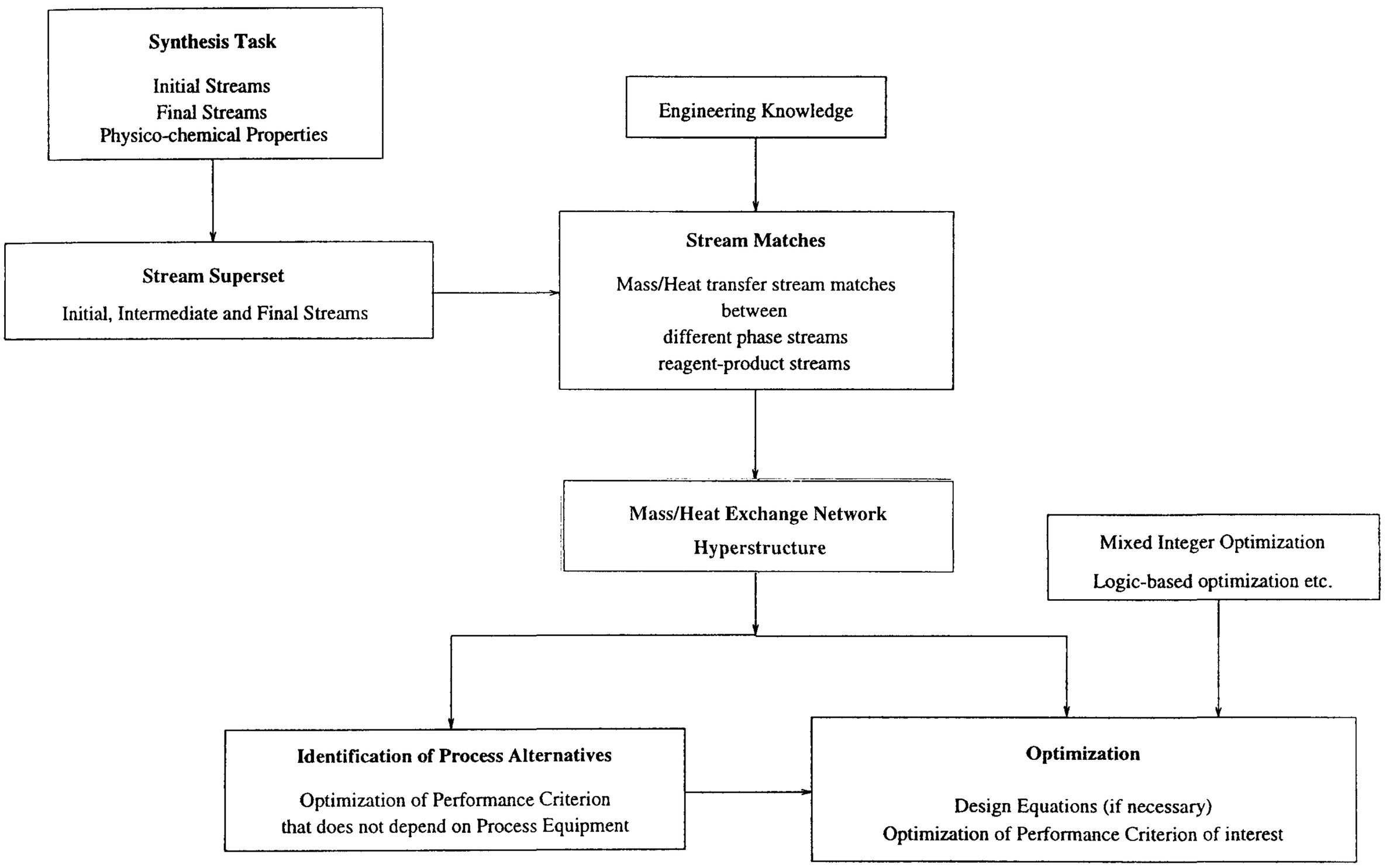

Figure 6.8: Synthesis Framework

cost of a distillation tray (liquid-vapour stream match) can be approximated based on the separation difficulty, which translates to inlet and outlet mole fractions and temperatures. Alternatively, one can explore at a first step process structures optimizing operating cost (or even total cost, where capital cost is approximated as before), while in a second step employ rigorous cost models for process units that may result from the optimization. In this case, each cost model should correspond to a certain arrangement of stream matches (see also example problems).

6.6 Examples

The Mass/Heat Exchange Hyperstructure representation framework is employed in the following examples to explore alternative structures in a separation system, reactor-separation system, a potential hybrid production system and heat integration networks, that can not be handled with the conventional HEN synthesis techniques.

Example 6.1

Acetone recovery system

The synthesis of an acetone recovery system at minimum total annualized cost (TAC) is of interest, where the air mixture is purified up to 98% and acetone is recovered in a product stream of at least 99% purity. Steam data and specifications are given in Table 6.1 (Douglas, 1988; Ciric and Jia, 1991).

Scrubbing water is available at 25^oC for acetone removal from the air mixture. The desired acetone-rich product must be recovered at 25^oC, while water effluent can be recycled in the process or discharged at 25^oC with an upper acetone concentration of 5%, where a purification cost is introduced (see Table 6.2).

Cooling water (CW) at 20^oC and steam (S) at 182^oC are available as cooling and heating utilities. Cost data for the utility consumption is given in Table 6.2.

The streams that can be present in the separation system, defining the *stream superset* are: air-acetone mixture, PA (which is unlikely to be present in the liquid phase, as well as to contain any water), acetone-rich product, liquid (LP) and vapour (VP), pure scrubbing water (W), water-

Stream	Flowrate (kmol/hr)	Acetone concentration	Temperature (^oC)
Air mixture	316.29	0.01478	25
Air Product	$\geq$ 311.615	$\leq$ 0.00029	25
Acetone product		$\geq$ 0.99	25
Water effluent		$\leq$ 0.05	25

Table 6.1: Stream Data and Specifications for Acetone Recovery

rich product effluent, in the liquid (LW) and the vapour (VW) phase, cooling water (CW) and steam (S).

All possible mass/heat and pure heat exchange matches are considered for acetone recovery (see Figure 6.9). However, considering conventional conditions, not all exchangers are feasible or necessary (*e.g.* there is no scope in transferring acetone from LP to PA). Thus, a preliminary screening reduces significantly mass/heat and heat exchanger possibilities. The mass/heat exchange hyperstructure is developed, based on the exchange matches of Figure 6.9 and all interconnections between exchangers are considered.

Mixed integer optimization techniques are employed for the hyperstructure optimization. The existence of each mass/heat and pure heat transfer block is denoted by a binary variable. Each block is described by mass/heat balances considering acetone as the transferred component of interest. Operating cost is calculated based on utility consumption (see Table 6.2). Capital cost is simultaneously accounted for. Data is given in Table 6.3. The detailed hyperstructure model is described in Appendix H.

The MINLP synthesis model involved 848 rows, 544 continuous variables and 127 binary variables (from which, only 16 are actually necessary, corresponding to mass/heat and heat exchange blocks, while the rest aid the structural optimization). The model was solved employing Generalized Benders Decomposition through the modelling system GAMS (Brooke *et al.*, 1988), in 6 GBD iterations. The proposed acetone recovery system is illustrated in Figure 6.10. It features an absorber, a distillation column and a water recycle stream, that is heat integrated with the distillation column feed, corresponding to a $TAC = \$697294/yr$.

Utility	Annualized Cost
Scrubbing Water	$\$16.132/(kmol/hr)yr$
Cooling Water	$\$26.190/(kW)yr$
Steam	$\$137.27/(kW)yr$
Water Effluent	$\$135476.1/(kmol\ acetone/hr)yr$

Table 6.2: Utility Cost Data for Acetone Recovery

Equipment	Annualized Cost ($\$/yr$)
Heat Exchanger	$1300A^{0.6}$
Absorber	$3400N_{st}$
Distillation Column	$17450N_{trays}^{1.4}V_{top}^{0.5}$

Table 6.3: Capital Cost Data for Acetone Recovery

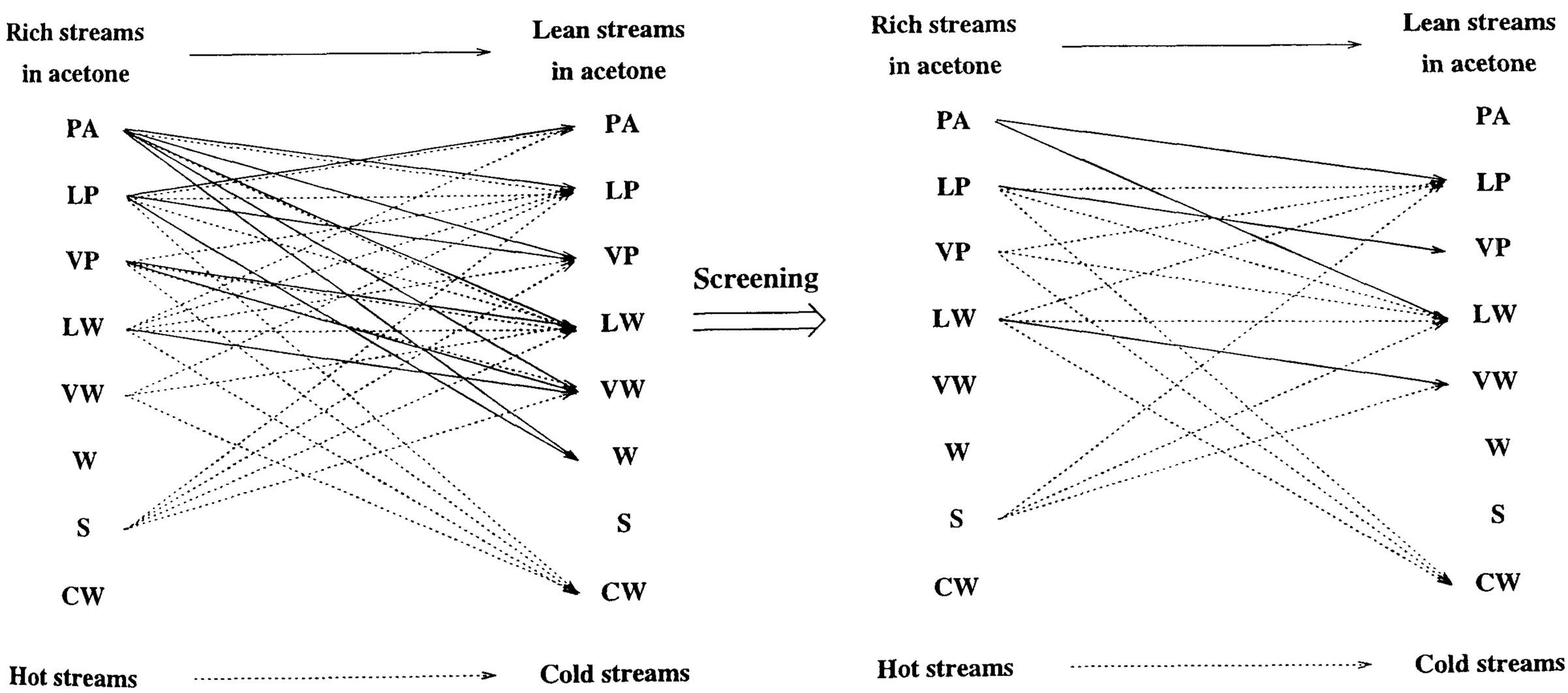

Figure 6.9: Mass/Heat and Heat Exchange Matches for Acetone Recovery

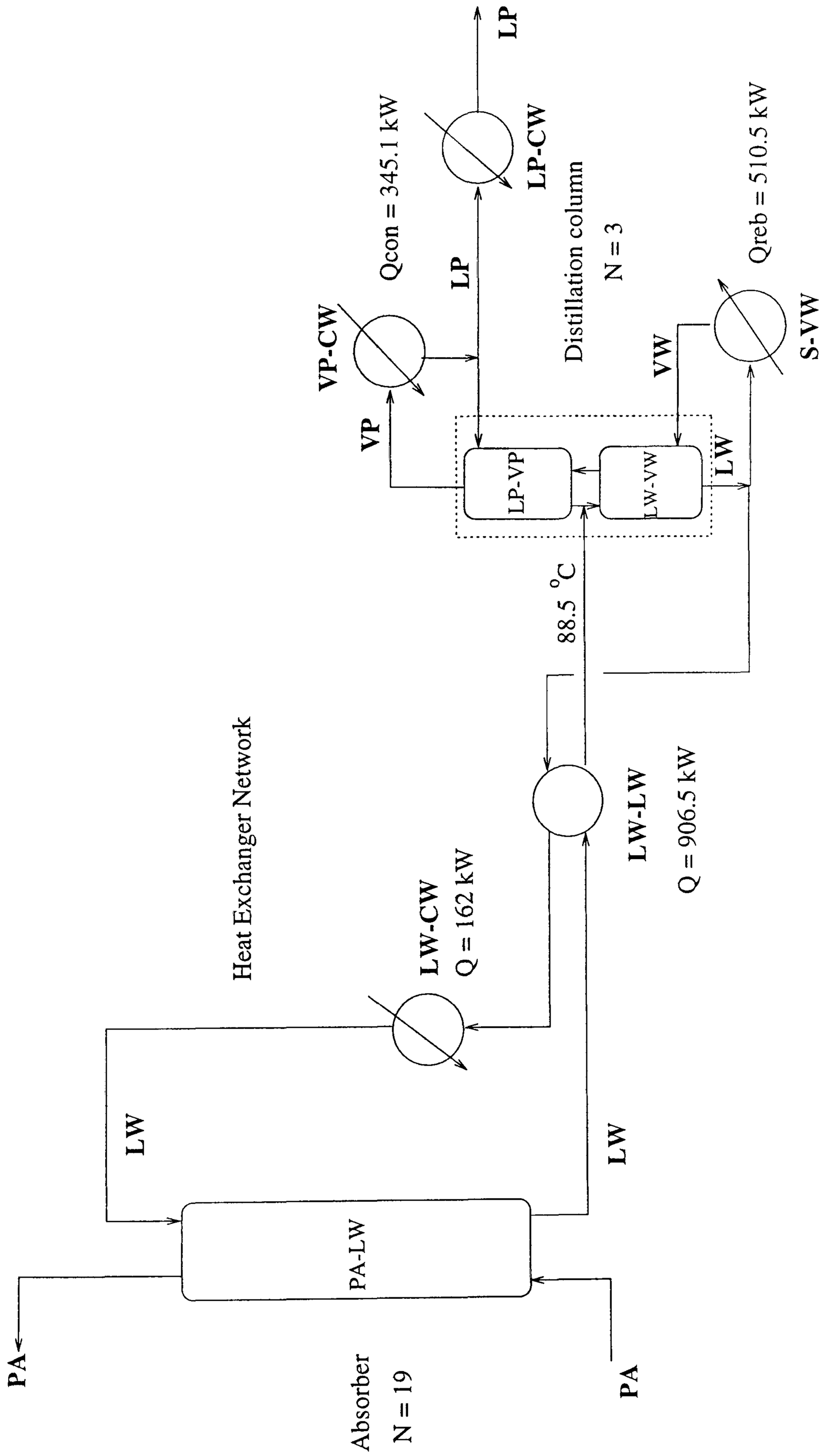

Figure 6.10: Acetone Recovery System

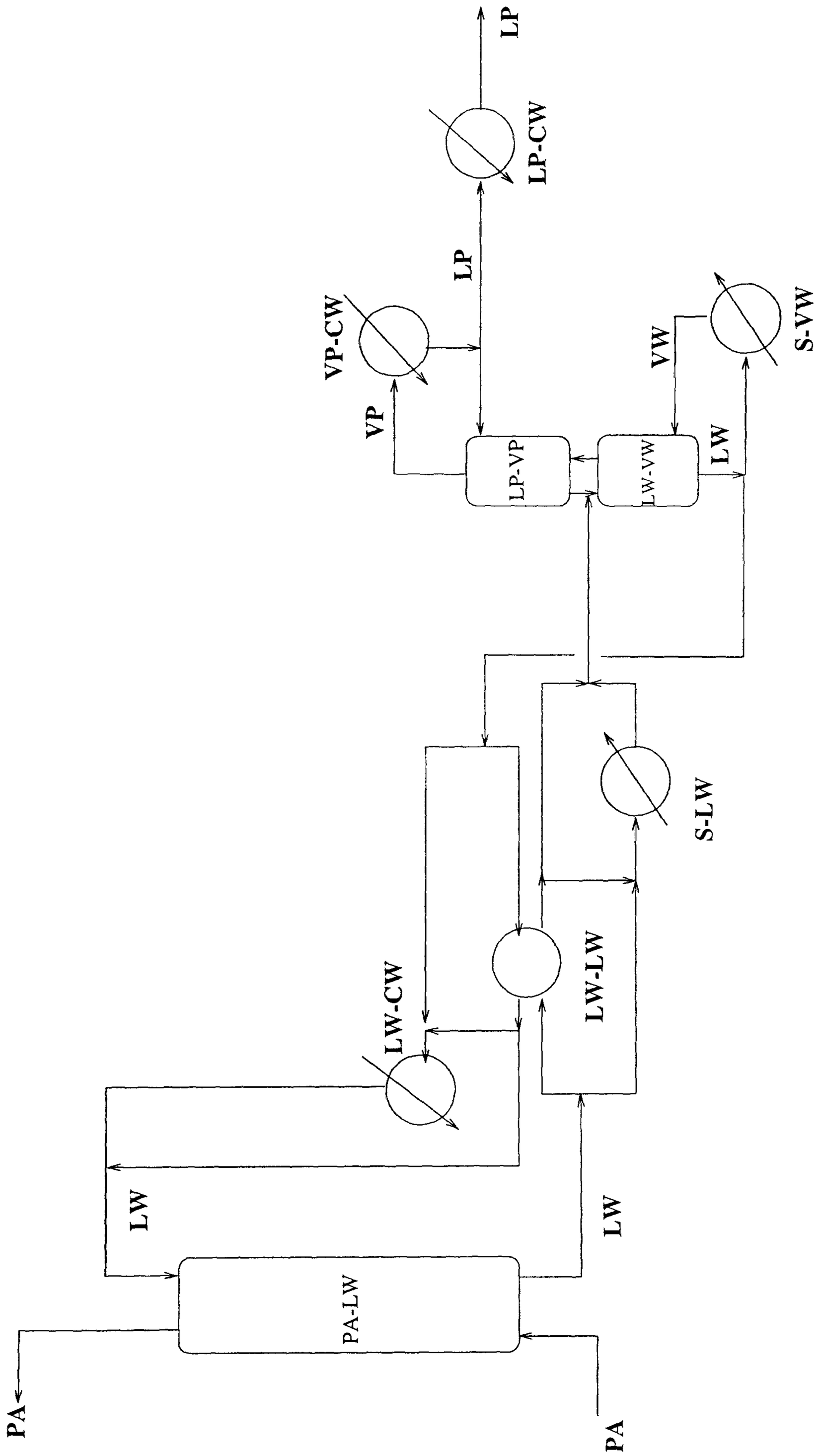

Figure 6.11: Acetone Recovery System - Initial Structure

Example 6.2

Ethylbenzene production

Ethylbenzene production through alkylation of benzene is studied in this example. As reported by Kokossis and Floudas (1991), the process is an intermediate stage for the production of styrene using the direct hydrogenation method and the reaction is carried out in the liquid phase, according to the following scheme:

$$C_6H_6 + CH_2 = CH_2 \underset{k_1'}{\overset{k_1}{\leftrightarrows}} C_6H_5CH_2CH_3$$

$$C_6H_5CH_2CH_3 + CH_2 = CH_2 \underset{k_2'}{\overset{k_2}{\leftrightarrows}} C_6H_4(CH_2CH_3)_2$$

Higher order alkylation products are not considered to form in significant amounts and are ignored at this stage. Ethylene is assumed to be completely consumed by the reactions in the liquid phase, the rates of which are determined by first order kinetics. The rate constants are taken equal for all reactions:

$$k_1 = k_1' = k_2 = k_2' = 0.4hr^{-1}$$

The reaction rates do not depend on temperature, while the liquid is assumed to leave the reactions at bubble point.

A production rate of 10 $kmol/hr$ of ethylbenzene is required at a minimum purity of 99.5% from pure benzene. The objective is to explore production schemes based on operating and capital costs.

Since ethylene does not affect the reaction rates and is completely consumed, it is not considered explicitly but only in operating cost factors, through the final product amounts. Thus, we consider benzene (**A**) to react to ethylbenzene (**B**) which further transforms to diethylbenzene (**C**).

$$A \underset{k_1'}{\overset{k_1}{\leftrightarrows}} B$$

$$B \underset{k_2'}{\overset{k_2}{\leftrightarrows}} C$$

The reactions take place in the liquid phase and the desired product (B) must be separated. Since all the considered components can be present in both liquid and vapour phases we consider one mixture stream present in the liquid and the vapour phase:

$$L\{A, B, C\} \text{ and } V\{A, B, C\}$$

We consider 5 L-L mass/heat exchange matches, 2 V-L matches, where B is transferred from vapour to liquid and 2 L-V matches, where B is transferred to the liquid phase, and all possible utility heat exchangers (heaters and coolers).

Mixed integer modelling and optimization techniques are employed. The existence of each exchange block is denoted by a binary variables. The synthesis model involves 61 binary variables. Operating cost includes: (i) benzene cost, (ii) ethylene cost, (iii) steam and cooling water cost. Cost data are given in Table 6.4. Minimization of operating cost only led to the process network of Figure 6.12(a). 10 $kmol/hr$ of pure benzene are fed to a battery of reaction blocks (PFR), while the reaction product is first fed to a separation block, where (**A**) is separated and recycled, and then to a purification block, where (**B**) is removed from the top. This configuration features an operating cost of \$ 851087/yr.

Simplified capital cost functions are then introduced to the synthesis model. The reactor is sized as PFR, based on its total volume, while the two separation blocks (V-L, L-V), which may comprise more than one mass/heat exchange blocks, in general, are sized as distillation columns, based on feed flow and compositions (Kokossis and Floudas, 1991). V-L matches are treated as part of a column, where (**A**) is separated from (**BC**), while L-V matches are treated as part of a B/C column. Cost functions are given in Table 6.5.

Utility	Cost
Benzene	$\$4.92/(kmol)yr$
Ethylene	$\$12.98/(kmol)yr$
Cooling Water	$\$24.5/(kW)yr$
Steam	$\$146.8/(kW)yr$

Table 6.4: Operating Cost Data for Benzene Alkylation

Equipment	Annualized Cost
Reactor	$\$12760.43 + 14059.8V/yr$
Column A/BC	$\$41357.3 + F(432.7 + 418.42x_A - 152.4x_B)/yr$
Column B/C	$\$54966.4 + F(748.6x_B - 588.7x_B^2)/yr$

Table 6.5: Capital Cost Functions for Benzene Alkylation

Optimization of total cost results in the same network structure with different equipment sizes and flows. The new process network (see Figure 6.12(b)) features a total annualized cost of $\$\ 1348156\ /yr$ (with an operating cost of $\$\ 1032868\ /yr$).

One can note that the separation blocks are not conventional distillation columns (reflux ratio $= 0$) and the feed enters the "columns" at the top. This may be due to the fact that column operation has not been modelled explicitly (which may be done at a second stage). Limiting the model to more conventional structures (see Figure 6.13) increases the total process cost ($\$\ 1354560\ /yr$).

Example 6.3

Ethylene glycol production

The production of ethylene glycol has been revisited recently, since the highly exothermic reactions involved can be exploited in a simultaneous reaction/separation system (reactive distillation). Ciric and Gu (1994) have studied the design of such a reactive distillation column having postulated as the only alternative a multifeed distillation column, where the reaction takes place in the liquid holdup and employing a tray-by-tray model. Ciric and Miao (1994) have further studied steady-state multiplicities in an ethylene glycol reactive distillation column. Here the synthesis

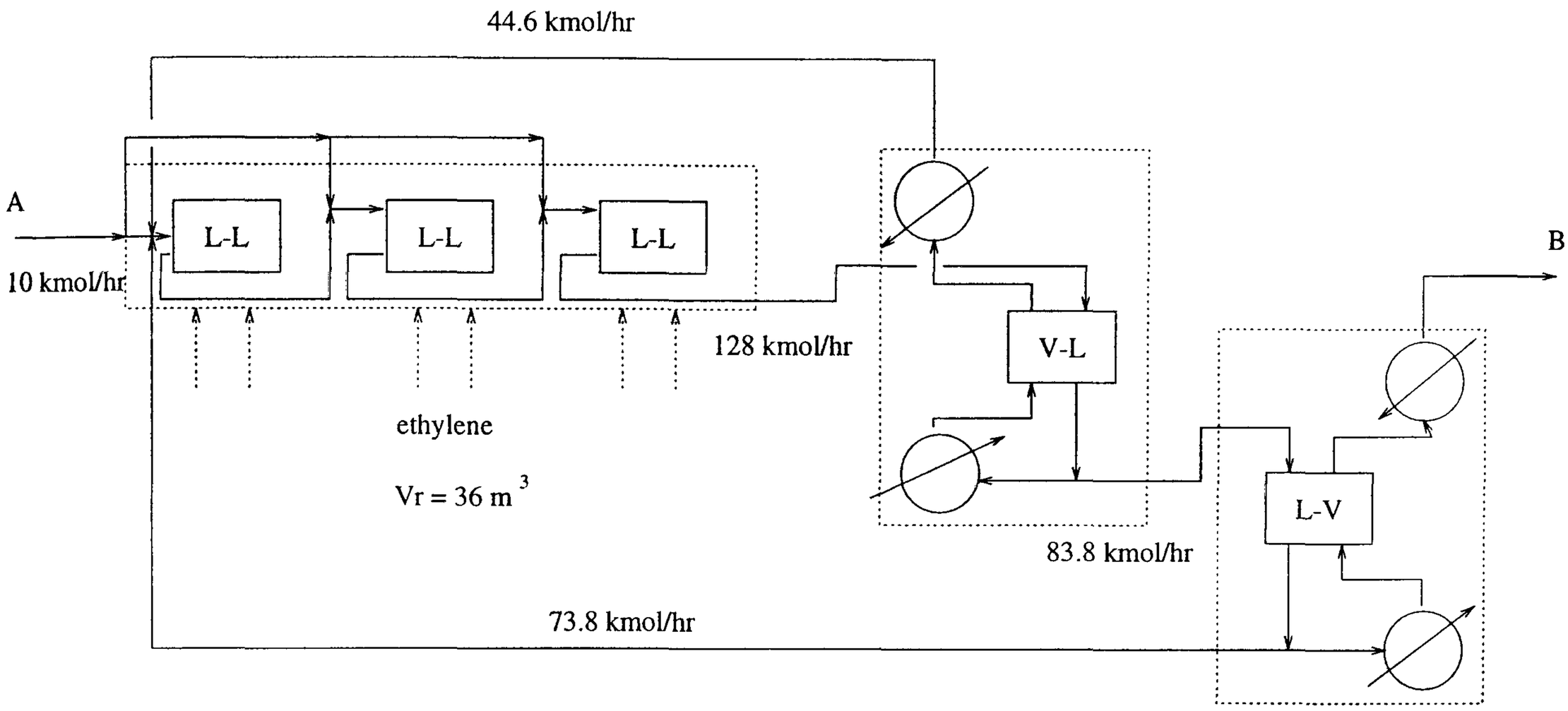

(a) Minimum Operating Cost

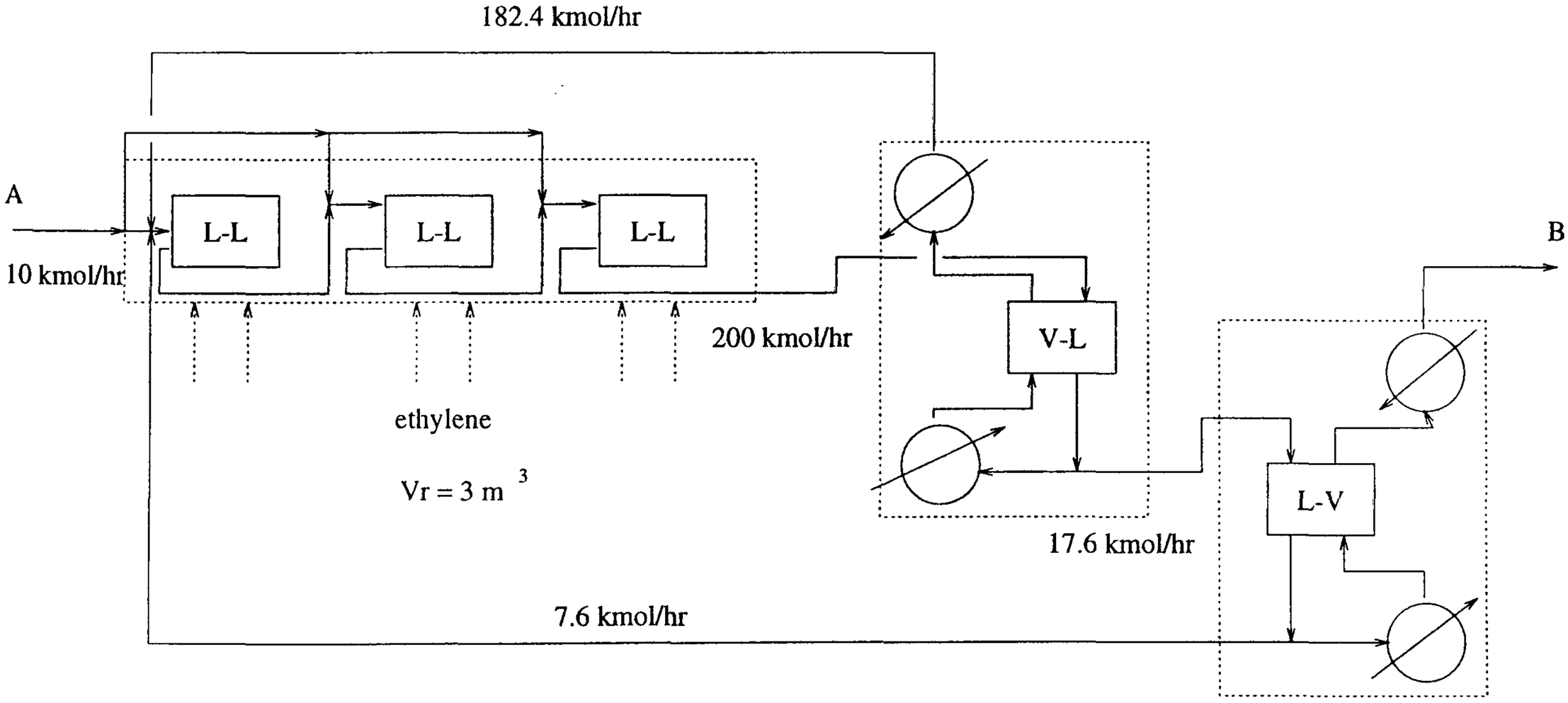

(b) Minimum TAC

Figure 6.12: Alkylation of Benzene

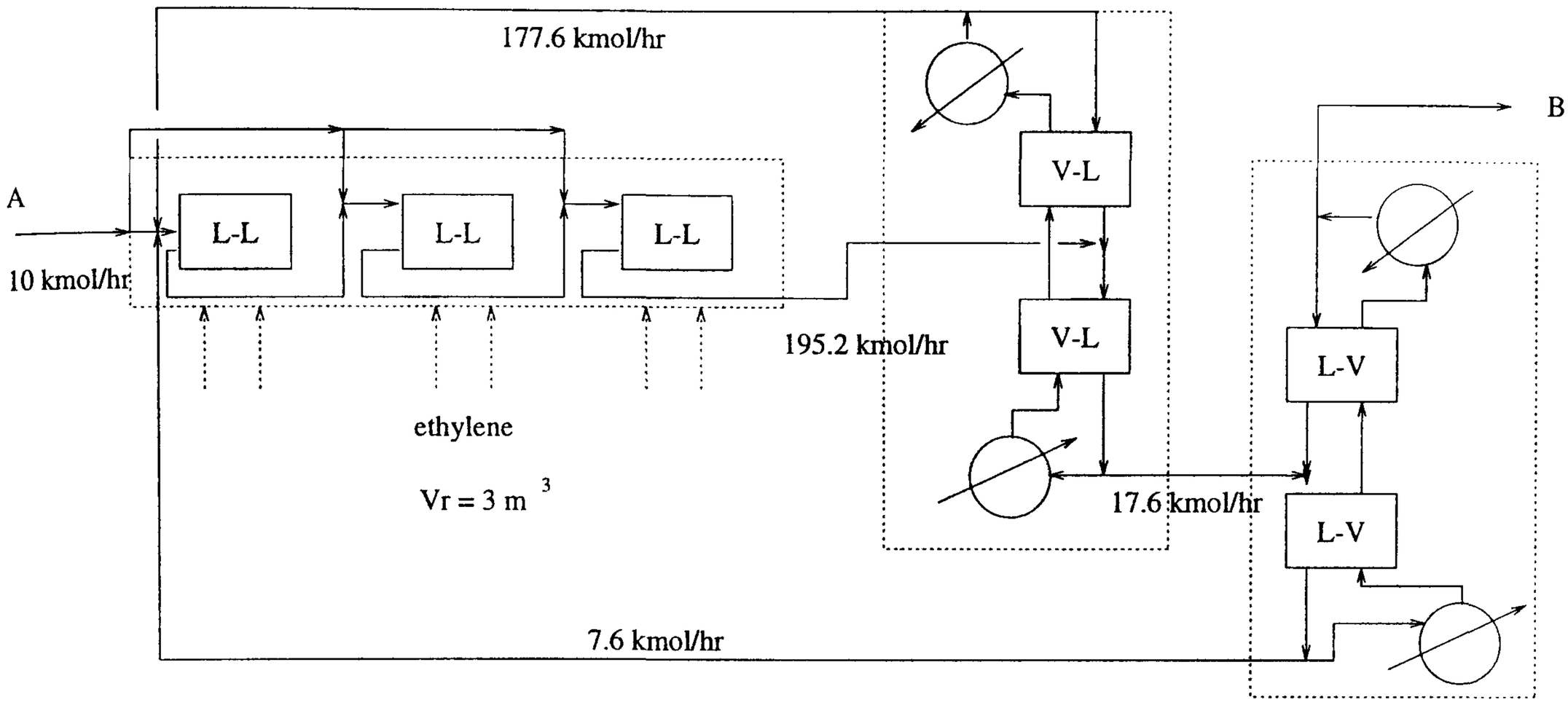

Figure 6.13: Conventional Columns in Benzene Alkylation

task is studied without confining to any particular process configuration.

Ethylene glycol ($C_2H_6O_2$ or EG) is produced from ethylene oxide (C_2H_4O or EO) and water (H_2O or W), while heavier glycols are also formed as byproducts:

$$C_2H_4O + H_2O \longrightarrow C_2H_6O_2 \qquad (Reaction\ 1)$$

$$C_2H_4O + (C_2H_4O)_{m-1}H_2O \longrightarrow (C_2H_4O)_mH_2O$$

Here we assume that by-product formation is efficiently represented by the reaction towards diethylene glycol (DG):

$$C_2H_6O_2 + H_2O \longrightarrow (C_2H_4O)_2H_2O \qquad (Reaction\ 2)$$

Both reactions are highly exothermic and assumed to occur in the liquid phase only, while product purification is aided by the large volatility difference of the components of the reaction product mixture. Physical and chemical data are given in Table 6.6.

A production rate of 25 $kmol/hr$ of a stream 95% rich in EG is desired. The synthesis task is studied on the basis of minimum operating cost only. Cost data are given in Table 6.7.

Reaction Kinetics	
Reaction	
R1	$3.19 \times 10^9 exp[-9.547/T(K)]x_{EO}x_W$
R2	$6.3 \times 10^9 exp[-9.547/T(K)]x_{EO}x_{EG}$

Reaction Heats in kJ/mol	
Reaction	
R1	-80.0
R2	-13.1

Vapour Pressures in atm	
EO	$71.9exp(5.72(T(K)-469)/(T(K)-35.9))$
W	$221.2exp(6.31(T(K)-647)/(T(K)-52.9))$
EG	$77.0exp(9.94(T(K)-645)/(T(K)-71.4))$
DG	$47.0exp(10.42(T(K)-681)/(T(K)-80.6))$

Table 6.6: Chemical and Physical Data for Ethylene Glycol Example

Since the four components that characterize the synthesis task can all be present in one stream mixture, in the liquid and the vapour phase, the stream superset involves only *one liquid and one vapour stream*:

$$L\{EO, W, EG, DG\} \text{ and } V\{EO, W, EG, DG\}$$

We consider 5 mass/heat exchange matches ($L\{EO, W, EG, DG\}$-$L\{EO, W, EG, DG\}$) and 15 mass/heat exchange matches ($V\{EO, W, EG, DG\}$-$L\{EO, W, EG, DG\}$) and all possible utility heating and cooling heat exchangers. Representing each match with a binary variable and considering all possible interconnections between blocks the synthesis problem is formulated as a MINLP, featuring 75 binary variables.

As shown in section 6.4.e (Figures 6.6 and 6.7) conventional and non-conventional alternatives are simultaneously encountered in the proposed representation framework. Minimization of operating cost, which includes raw material cost, purification and utility cost, results in the process structure of Figure 6.14, featuring a reactive distillation column with 2 reaction zones and multiple feeds. The operating cost of the column is $1.1710^6 USD/yr$. Temperature and composition profiles suggest that the proposed solution is indeed one of the multiple steady-states, that such a reactive distillation column can have (Figures 6.15 and 6.16).

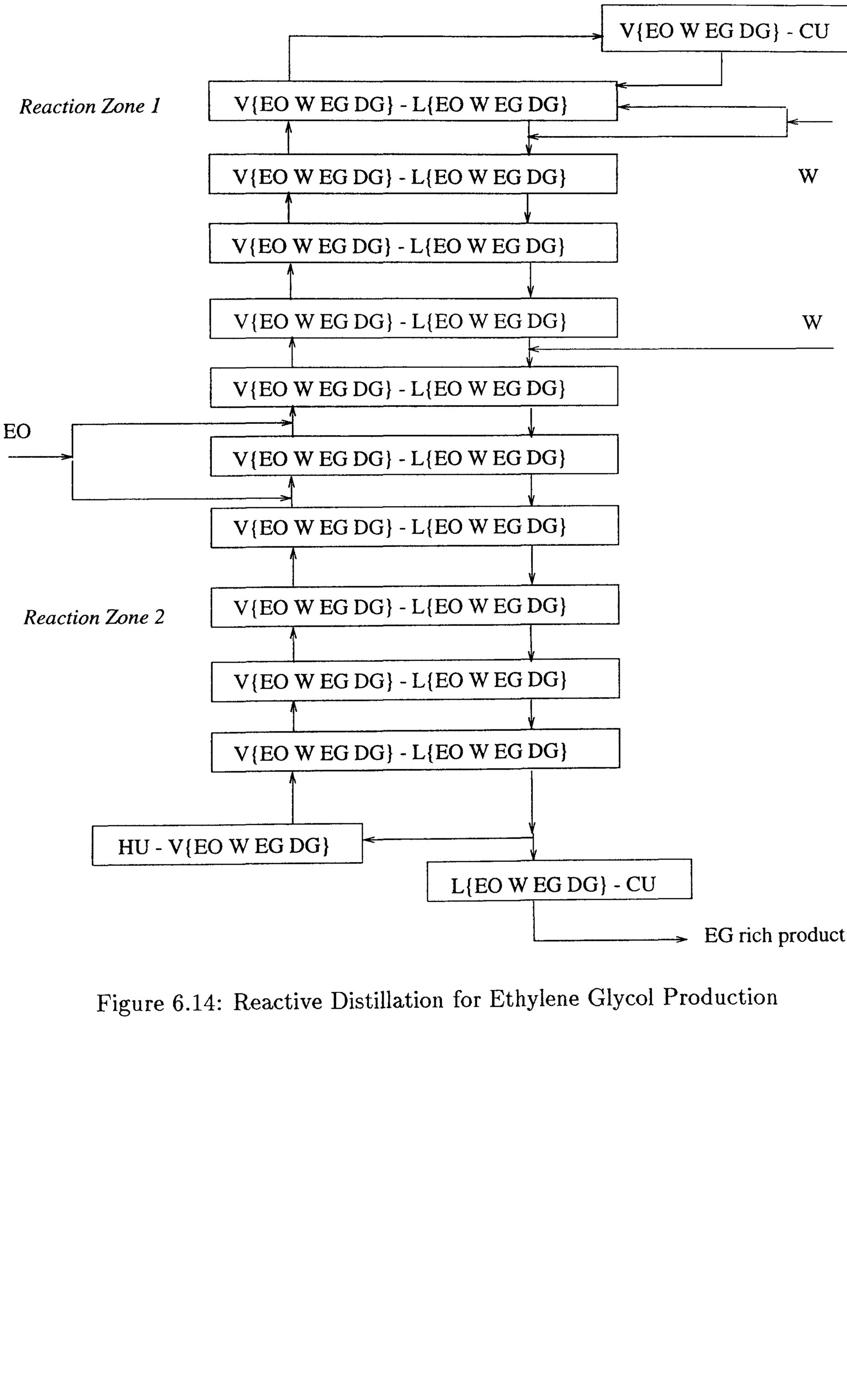

Figure 6.14: Reactive Distillation for Ethylene Glycol Production

EO	\$ 43.7/*kmol*
W	\$ 21.9/*kmol*
H_2O in effluent	\$ 15/*kmol*
Cooling	\$ 24.5 /*kWyr*
Heating	\$ 146.8 /*kWyr*

Table 6.7: Cost Data for Ethylene Glycol Example

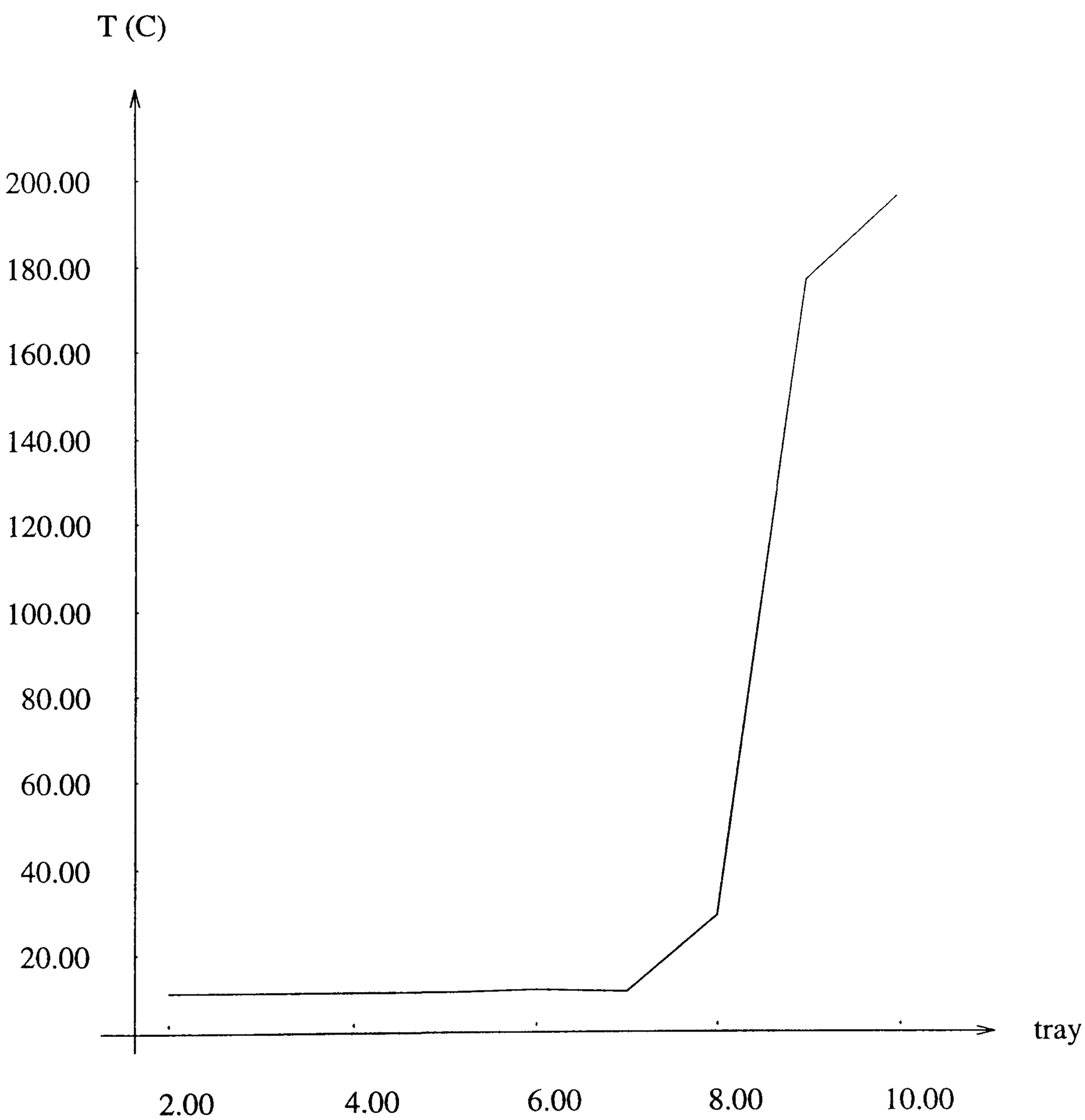

Figure 6.15: Temperature Profile in Reactive Distillation Column

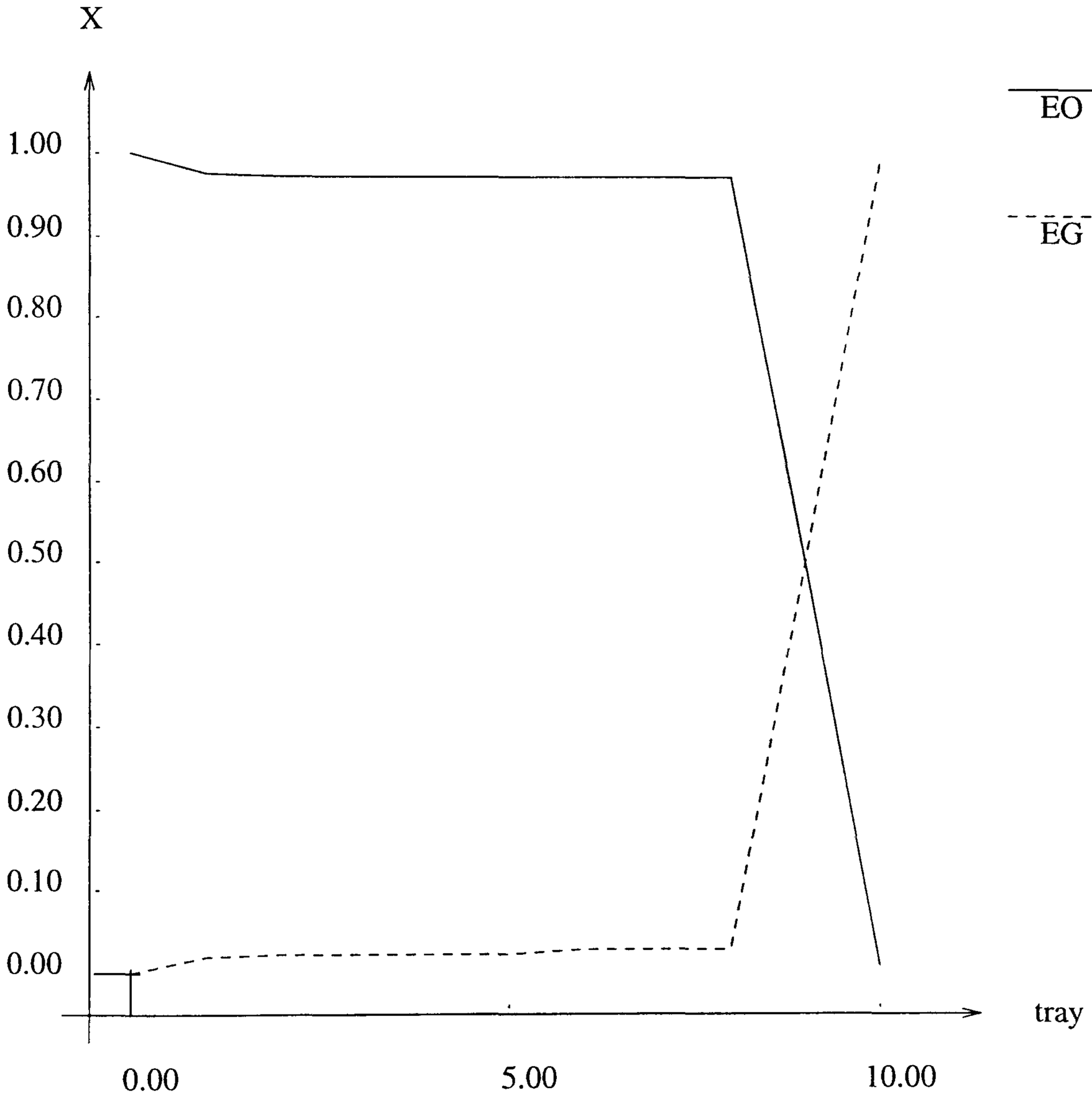

Figure 6.16: Composition Profile in Reactive Distillation Column

Example 6.4

Synthesis of heat exchanger networks with mixed streams and variable heat capacities

Considering all possible initial, intermediate and final streams in a process enhances also heat integration possibilities, allowing for stream mixing. Chang *et al.* (1994) studied the synthesis of heat exchanger networks, incorporating in their procedure options for merging and/or splitting streams. Their approach employs decomposition techniques where minimum utility cost, number of units and optimal structure are successively determined, being limited however to streams with constant heat capacities. The proposed representation framework can also be applied in the synthesis of heat integrated systems with mixed streams *and variable heat capacities.*

(a) Consider first the heat exchanger network problem described in Table 6.8 (Chang *et al.*, 1994). It involves two hot streams to be cooled (H1 and H2) and three cold streams (C1, C2 and C3) to be heated and mixed to give two product-cold streams (C4 and C5). The problem *stream superset* is constructed, including the hot streams (H1 and H2), the initial and final cold streams (C1, C2, C3, C4, C5) and the mixture of the initial cold streams (C123). Multiple heat exchange matches are considered for the cold mixture and the hot streams and all the possible interconnections between them. The HEN synthesis problem is formulated as a MINLP, involving 7 possible exchangers. A minimum temperature approach of $\Delta T_{min} = 11.1^{o}C$ is required for feasible heat transfer in each exchanger. The proposed network is illustrated in Figure 6.17 and is similar to the solution proposed by Chang *et al.* (1994).

(b) In order to illustrate the possibility to account for variable heat capacities, consider the example problem described in Table 6.9 (Papalexandri *et al.*, 1994). Five hot process streams must be cooled resulting in 3 final hot streams, while 3 cold process streams must be heated giving 2 final cold streams. All streams are multicomponent mixtures (13 components) with variable heat capacities (depending on temperature and composition) Composition and heat capacity data are given in Tables 6.10 and 6.11. Streams can be mixed as illustrated in Table 6.9. Three hot utilities are available (three-level steam), as well as cooling water (cost data given in Table 6.12). All possible streams and heat exchange matches are considered, resulting in a hyperstructure with 29 possible heat exchangers. The optimal heat exchanger network is illustrated in Figure 6.18. It involves stream mixing at several temperature levels and corresponds to a total annualized cost of

Stream	Heat Capacity Flowrate ($kW/^oC$)	Inlet Temperature (^oC)	Outlet Temperature (^oC)
H1	16.6	248.9	121.1
H2	13.3	204.4	65.6
C1	11.4	37.8	
C2	12.9	65.6	
C3	13.0	93.3	
C4	24.4		204.4
C5	12.9		182.2
Steam	∞	300	300
Water	∞	20	30

Table 6.8: First Example in Heat Integration

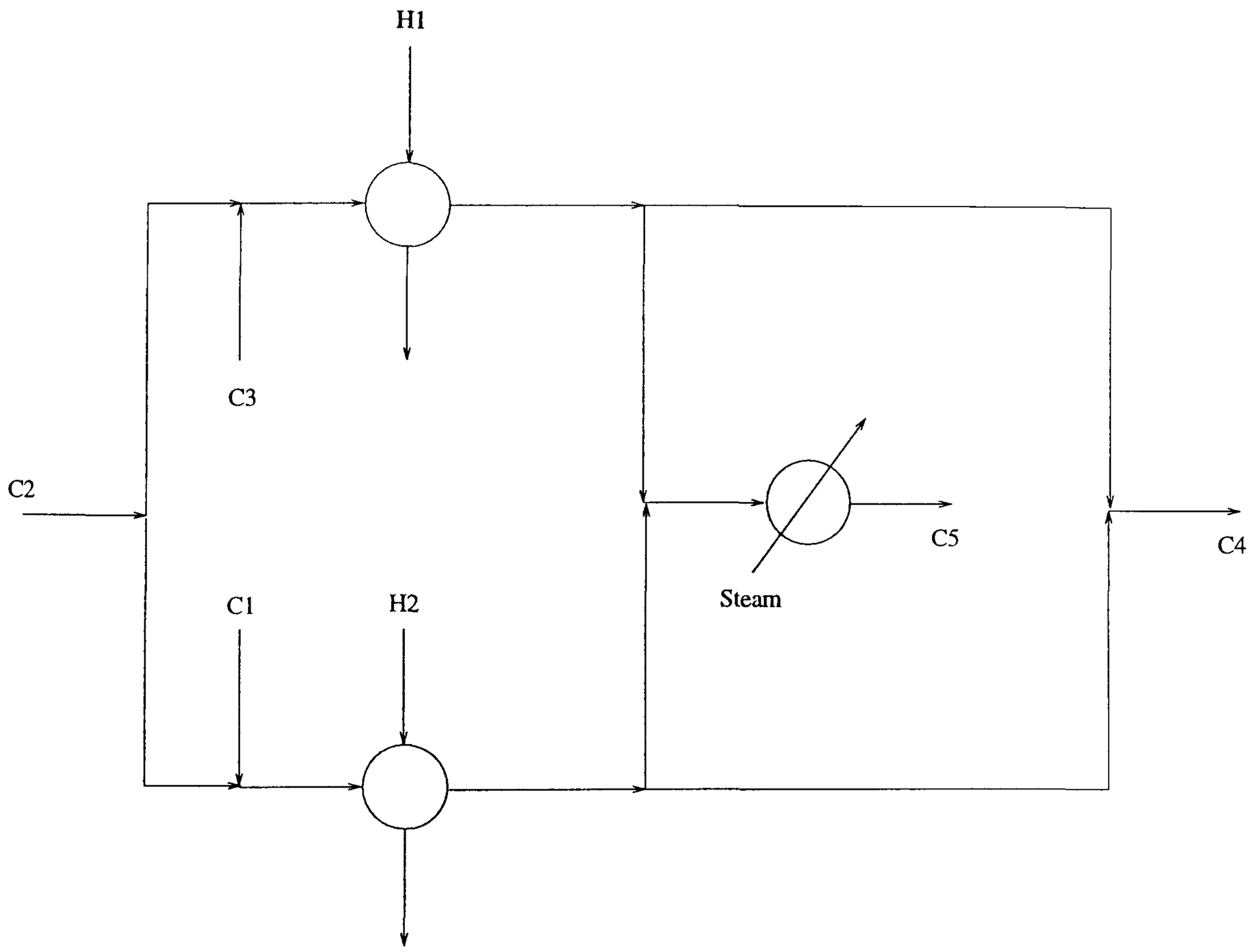

Figure 6.17: Heat Exchanger Network - I

Stream	Stream Type	Flow ($kmol/hr$)	Inlet Temperature (^oC)	Outlet Temperature (^oC)
H1	Initial	84.9	48.5	40
H2	Initial	3197.2	160.0	-
H3	Initial	30.5	41.9	-
H4	Initial	131.2	42.0	-
H23	Mixture of H2, H3	3227.8	-	-
H234	Mixture of H2, H3, H4	3359.0	-	45
H5	Initial	350.6	123.0	45.0
C1	Initial	122.3	25.0	-
C2	Initial	2412.0	48.5	-
C12	Mixture of C1, C2	2534.4	-	105.5
C3	Initial	1326.5	62.0	76.6
HS1	High Pressure Steam	∞	240.0	240.0
HS2	Medium Pressure Steam	∞	182.0	182.0
HS3	Low Pressure steam	∞	140.0	140.0
CW	Cooling Water	∞	20.0	25.0

Table 6.9: Second Example in Heat Integration

$\$ 122080/yr$.

6.7 Summary and Discussion

The mass/heat exchange hyperstructure module, as defined in Chapter 1, has been utilized as the building block of entire process flowsheets, involving reactors, separations, etc. Mass/heat and pure heat exchangers are described by simple mass and energy balances, where mass and energy generation and/or consumption are taken into considerations. Thus, the concepts of mass and heat transfer are broadened to include chemical reactions as well. Driving force constraints for mass transfer/reaction are considered at each end of the mass/heat exchanger modules; similarly, for temperature approach constraints.

Mass transfer between immiscible phases is driven by ensuring a minimum approach (ϵ) of the system to equilibrium compositions. The same holds for mass transfer/ generation/ consumption when chemical reactions occur. Equilibrium may also be accounted for by setting $\epsilon \rightarrow 0$, *i.e.* allowing the system a positive or zero driving force. Mass/heat exchangers featuring equilibrium

	Molecular Fraction												
	C1	C2	C3	C4	C5	C6	C7	C8	C9	C10	C11	C12	C13
H1	0.117	0.059	0.038	0.023	0.048	0.036	0.414	0.000	0.000	0.000	0.261	0.000	0.000
H2	0.088	0.044	0.028	0.017	0.000	0.027	0.319	0.070	0.000	0.000	0.295	0.106	0.001
H3	0.005	0.003	0.003	0.001	0.557	0.005	0.397	0.018	0.001	0.000	0.005	0.003	0.000
H4	0.075	0.038	0.040	0.015	0.794	0.022	0.010	0.000	0.000	0.000	0.004	0.000	0.000
H5	0.000	0.000	0.000	0.000	0.000	0.000	0.000	0.000	0.001	0.000	0.175	0.823	0.001
C1	0.000	0.000	0.000	0.002	0.996	0.001	0.000	0.000	0.001	0.000	0.175	0.823	0.001
C2	0.117	0.059	0.038	0.023	0.048	0.036	0.414	0.000	0.000	0.000	0.261	0.000	0.000
C3	0.000	0.000	0.000	0.000	0.000	0.000	0.000	0.001	0.001	0.000	0.913	0.085	0.000

Table 6.10: Stream Compositions for Second Example in Heat Integration

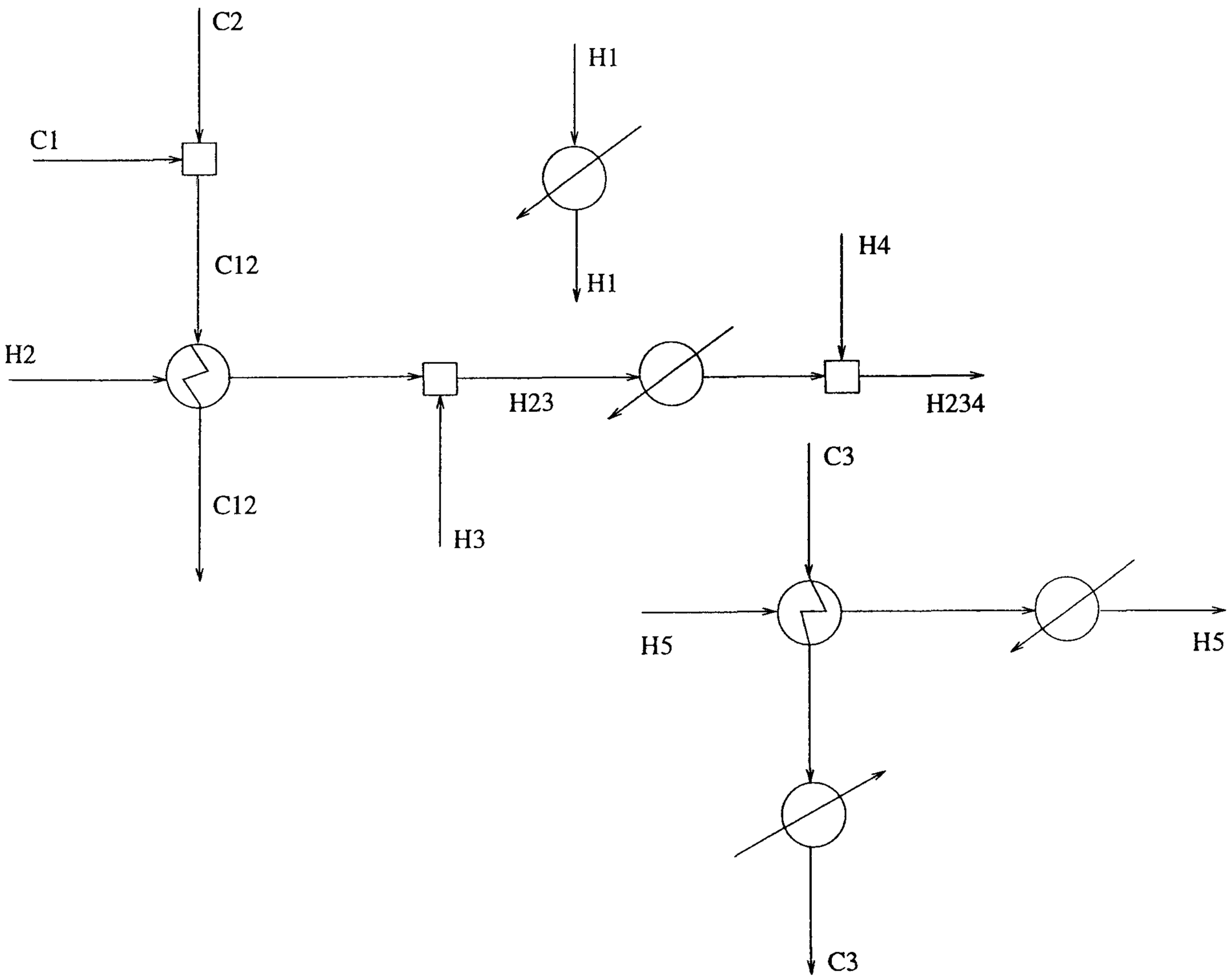

Figure 6.18: Heat Exchanger Network - II

$Cp = AT(°C) + B\ (kJ/kmol)$													
	C1	C2	C3	C4	C5	C6	C7	C8	C9	C10	C11	C12	C13
	A												
H1	-0.002	-0.003	0.003	0.037	0.083	0.107	0.029	-0.505	-0.733	-1.148	-8.268	0.495	-4.339
H2	0.001	-0.001	0.008	0.056	0.091	0.120	0.028	0.093	0.111	0.104	-0.321	1.597	-0.189
H3	-0.002	-0.003	0.002	0.035	0.082	0.104	0.031	-0.570	-0.846	-1.337	-10.965	0.430	-5.961
H4	-0.002	-0.003	0.003	0.036	0.084	0.108	0.032	0.000	0.000	0.000	-8.716	0.000	0.000
H5	0.000	0.000	0.000	0.000	0.000	0.000	0.000	0.000	0.000	0.000	0.143	0.643	0.568
H23	0.001	-0.001	0.008	0.056	0.091	0.120	0.028	0.093	0.111	0.104	-0.321	1.597	-0.189
H234	0.001	-0.001	0.008	0.056	0.091	0.120	0.028	0.093	0.111	0.104	-0.321	1.597	-0.189
C1	0.000	0.000	0.000	0.025	0.060	0.072	0.000	0.000	0.000	0.000	0.000	0.000	0.000
C2	-0.002	-0.003	0.003	0.037	0.083	0.107	0.029	-0.505	-0.733	-1.148	-8.268	0.495	-4.339
C12	-0.002	-0.003	0.003	0.037	0.083	0.107	0.029	-0.505	-0.733	-1.148	-8.268	0.495	-4.339
C3	0.000	0.000	0.000	0.000	0.000	0.000	0.000	0.288	0.285	0.144	0.098	0.552	0.556
	B												
H1	29.62	21.32	29.75	35.57	43.22	52.93	39.04	176.61	211.37	260.65	683.53	534.95	632.92
H2	29.23	21.11	29.19	33.86	42.53	51.85	39.11	125.51	140.09	156.78	99.21	-51.15	290.63
H3	29.56	21.25	29.70	35.56	42.95	52.57	38.63	170.63	205.24	253.34	729.33	56.45	692.15
H4	29.54	21.23	29.67	35.47	42.82	52.38	38.55	0.00	0.00	0.00	637.81	0.00	0.00
H5	0.00	0.00	0.00	0.00	0.00	0.00	0.00	0.00	0.00	0.00	60.75	616.15	208.68
H23	29.23	21.11	29.19	33.86	42.53	51.85	39.11	125.51	140.09	156.78	99.21	-51.15	290.63
H234	29.23	21.11	29.19	33.86	42.53	51.85	39.11	125.51	140.09	156.78	99.21	-51.15	290.63
C1	0.00	0.00	0.00	36.56	45.28	55.85	0.00	0.00	0.00	0.00	0.00	0.00	0.00
C2	29.62	21.32	29.75	35.57	43.22	52.93	39.04	176.61	211.37	260.65	683.53	53.49	632.92
C3	0.00	0.00	0.00	0.00	0.00	0.00	0.00	147.65	163.56	182.75	65.10	70.08	209.797
C12	29.62	21.32	29.75	35.57	43.22	52.93	39.04	176.61	211.37	260.65	683.53	53.49	632.92

Table 6.11: Physical Properties for Second Example in Heat Integration

HS1	$\$84/kWyr$
HS2	$\$65.5/kWyr$
HS3	$\$61.5/kWyr$
CW	$\$7.26/kWyr$

Table 6.12: Cost Data for Second Example in Heat Integration

compositions at one end ("active" driving force constraints) actually correspond to the "pinched" mass contactors of the Rigg-Swaney network representation (Rigg and Swaney, 1994).

When mass and/or heat transfer are governed by non-convex driving force functions, constraining the two ends of a mass/heat exchanger may not suffice for a feasible mass/heat transfer throughout the exchanger. This could be overcome by discretization of the mass/heat exchange block, so that intermediate concentrations and temperatures are taken into account.

The representation scheme has been coupled with synthesis guidelines towards a generalized process synthesis framework, where synthesis alternatives are explored without pre-postulating unit networks. Limitations of current synthesis methods are overcome in cases as in HEN synthesis problems, or in more general problems, where non-conventional synthesis schemes are identified.

Chapter 7

Conclusions and Future Directions

7.1 Conclusions

The objective of this work has been to provide a systematic framework in order to include operability aspects, namely flexibility and controllability requirements, in the synthesis of mass and heat integrated process systems and to exploit in a systematic way trade-offs between heat integration, integration of treatment and separation technologies and process control.

To this end, a systematic representation framework of heat and mass integration alternatives has been introduced in Chapter 1, where heat and mass transfer principles are exploited in mass/heat and heat exchange blocks, defining a mass/heat hyperstructure module. Based on this multipurpose representation block a hyperstructure is developed including *all* structural, operational and control alternatives for a heat and mass integrated process system.

In Chapter 2, the mass/heat exchange hyperstructure is restricted to heat exchange alternatives only and the HEN synthesis and retrofit design problems are studied with a two-fold objective: minimum total annualized cost and desired degree of flexibility. The flexibility/feasibility analysis framework (Swaney and Grossmann, 1985) is utilized to quantify flexibility requirements. An iterative procedure is proposed for the synthesis/retrofit design of cost-optimal and flexible heat exchanger networks. In a first step, flexibility of the network is assessed and critical operating conditions, that violate (or limit) the network feasibility over the desired uncertainty region, are identified. In a second step, a multiperiod synthesis/retrofit model is developed based on nominal and critical operating conditions, where operating and capital cost trade-offs are fully exploited to obtain cost-optimal and flexible HENs. Example problems are presented to illustrate the ap-

plicability of the proposed framework to network debottlenecking through structural, design or operational modifications. Furthermore, an attempt is made to formulate explicit flexibility requirements within the HEN synthesis problem for special network structures, in order to derive flexible and optimal HENs in a single step.

In Chapter 3 controllability aspects in heat exchanger networks are explored. In a first step, structural controllability is studied. An explicit criterion for total (structural) disturbance rejection is formulated, based on a variable network structural matrix, and introduced to the HEN synthesis problem through a set of *linear* constraints, that do not increase the problem complexity. The structural properties of the proposed hyperstructure network representation are further exploited to investigate *dynamic aspects* in HENs. Time responses and gains are explored simultaneously with all HEN control alternatives in order to obtain cost-optimal networks that satisfy controllability requirements. Graph theory concepts are utilized in representing network alternatives, while HEN dynamic behaviour is described in terms of *variable* operating conditions. Through the formulation of simple controllability criteria it is proven that it is actually possible to include analytical controllability requirements in the synthesis of HENs, when the network structure and operating point are still unknown. Example problems are presented to illustrate the implications of incorporating controllability requirements in HEN synthesis on operating and capital investment cost and on network operability.

The mass/heat exchange hyperstructure is restricted to mass exchange alternatives only in Chapter 4, to explore trade-offs between operating and capital investment cost in the synthesis of Mass Exchange Networks for waste treatment. A mass exchange hyperstructure and a MEN synthesis model are developed, where operating cost (cost of mass separating agents) and capital cost are optimized *simultaneously*, exploring all mass exchange alternatives, including stream regeneration and recycling. No limitations are posed through concepts that may simplify the synthesis procedure, but do not represent a thorough assessment of cost optimality (pinch). The two-way trade-off between operating and capital cost in MEN optimality has been demonstrated with a number of examples from waste treatment, metal recovery, etc. The proposed model has been extended to address MEN synthesis with multiple component targets and reactive mass exchange.

The iterative framework for flexibility, introduced in Chapter 2, is further extended in Chapter 5 to the synthesis of cost-optimal and flexible mass and heat integrated processes. Two examples are presented to demonstrate how the hyperstructure network representation can be exploited to

address system operability, structure and design trade-offs.

Finally, in Chapter 6, mass and heat transfer principles are utilized within mass/heat exchange hyperstructure to represent process synthesis alternatives in general. Within a systematic representation framework, based on the multipurpose mass/heat exchange block, synthesis alternatives are explored without prepostulating unit networks and unit operations. A variety of examples are presented to illustrate the applicability of the proposed framework to different synthesis problems. Limitations of current methods for synthesis problems (*e.g.* HEN synthesis or more general problems) are overcome and non-conventional synthesis schemes can be identified.

In summary, *the main contributions of this work* have been:

- A systematic representation framework has been introduced for synthesis alternatives, where simple mass and heat transfer concepts are utilized to describe unit operations through a multipurpose hyperstructure module. Synthesis schemes can be explored without prepostulating unit operations. Hybrid and non-conventional systems can be identified using fundamental physico-chemical principles.

- Structural properties of the proposed hyperstructure have been exploited in order to investigate the operability characteristics of candidate synthesis schemes, *simultaneously* considering economic optimality.

- In heat exchanger networks, a synthesis model has been proposed that enables the incorporation of operability requirements in the synthesis objectives. Network flexibility is traded-off with overall network cost, within a synthesis model *without decomposition.* Mathematical programming concepts (mixed integer optimization) have been utilized to develop a HEN synthesis model for cost-optimal, structurally controllable HENs with favourable dynamic characteristics. Explicit controllability requirements have been introduced analytically within the synthesis model, when network structure and operating point are still unknown, to exploit interactions between process design and process control.

- A mixed integer nonlinear programming model has been proposed for the synthesis of waste treatment systems, where operating and capital costs can be properly balanced in the synthesis objective to guarantee cost optimality.

- Flexibility requirements have been introduced in the synthesis of mass integrated processes

in a systematic way.

- A systematic framework has been developed and successfully applied to an industrial case-study, involving "debottlenecking" of an existing process (Papalexandri *et al.*, 1994).

7.2 Recommendations for future directions

In the course of this research, several aspects could be worthy of further development. In particular:

(i) Flexibility requirements can be coupled with dynamic considerations. The flexibility analysis framework can be extended to the dynamic case, including the time element. In such a case, HEN behaviour will be described over time and critical operating conditions will be identified as points in time or through time profiles. Network structural properties can be utilized in exploring simultaneously control schemes, based on output responses to disturbance and/or manipulating inputs. Furthermore, manipulating inputs can be explicitly described by controller models and controller selection can be introduced to the HEN synthesis objectives. Thus, feasible operation over time may be traded-off with synthesis and control cost. Extensions of these ideas to other systems, such as distillation columns, can be envisaged. Work along these lines is currently in progress (Dimitriadis and Pistikopoulos, 1994; Mohideen *et al.*, 1995).

(ii) Efficient solution techniques.

Algorithmic procedures can be investigated in order to aid the solution of large-scale problems that result within the proposed framework for flexibility. In these multiperiod problems, operating variables are defined for each period and the network operation can be described independently in each considered period. This block-diagonal problem structure could be exploited in efficient decomposition solution methods.

Furthermore, network properties based on graph theory can be utilized to drive the solution methods.

(iii) The mass/heat exchange framework can be further explored and applied to non-ideal separations, complex reactions, etc.

Azeotropic distillation can be explored based either on detailed thermophysical properties to capture non-idealities or considering explicitly a potential azeotropic mixture as a separate phase and accounting for mass exchange between possible entrainers.

Non-conventional mass transfer, *e.g.* through membranes, biofilms etc., might be treated considering each active contributor to mass transfer as a separate hyperstructure stream, partaking to separate mass/heat exchanger blocks.

Costing procedures may be investigated to include capital cost considerations in synthesis through a valid objective function.

A systematic synthesis framework can be developed, where synthesis alternatives are created and optimized simultaneously. To this end, logic-based techniques can be studied in order to develop solution methods for the proposed synthesis procedure.

(iv) The block-hyperstructure network representation of synthesis alternatives can be explored in order to exploit structural properties to study operability aspects, beyond flexibility and controllability, *e.g.* reliability, safety, etc. at the synthesis level, as well as stability issues.

(v) Global optimization issues can be addressed, by proper exploitation of the special structure of the underlying models. As a first step, it will be beneficial to identify the cases for which the decomposition techniques described in this work, can be combined with decomposition-based techniques for global optimization (GOP algorithm, Floudas and Visweswaran (1990)).

References

Achenie, L.K.E. and L.T. Biegler (1990). A Superstructure Based Approach to Chemical Reactor Network Synthesis. *Comp. Chem. Engng.* **14**, 23.

Aggarwal, A. and C.A. Floudas (1992). Synthesis of Heat integrated Nonsharp Distillation Sequences. *Comp. Chem. Engng.* **16**, 89.

Ahmad, S., B. Linnhoff and R. Smith (1990). Cost Optimum Heat Exchanger Networks. 2. Targets and Design for Detailed Capital Cost Models. *Comp. Chem. Engng.* **14**, 751.

Arkun, Y., V. Manousiouthakis and A. Palazoglu (1984). Robustness Analysis of Process Control Systems-A Case Study of Decoupling Control in Distillation. *Ind. Eng. Chem. Proc. Des. Dev.* **23**, 93.

Bagajewicz, M.J. and V. Manousiouthakis (1992). Mass/Exchange Network Representation of Distillation Networks. *AIChE Jl.* **38**, 1769.

Bazaraa, M.S. and C.M. Shetty (1979). *Nonlinear Programming: Theory and Applications.* John Wiley, New York.

Bristol, E.H. (1966). On a new Measure of Interaction for Multivariable Proces Control. *IEEE Trans. Autom. Control, AC-11* **11**, 133.

Brooke, A., D. Kendrick and A. Meeraus (1988). *GAMS: A User Guide.* Scientific Press, Redwood City, CA.

Calandranis, J. and G. Stephanopoulos (1986). Structural Operability Analysis of Heat Exchanger Networks. *Chem. Eng. Res. Des.* **64**, 347.

Cerda, J. and M.R. Galli (1990). Synthesis of Flexible Heat Exchanger Networks - II. Nonconvex Networks with Large Temperature Variations. *Comp. Chem. Engng.* **14**, 213.

Cerda, J., M.R. Galli, N. Camussi and M.A. Isla (1990). Synthesis of Flexible Heat Exchanger Networks - I. Convex Networks. *Comp. Chem. Engng.* **14**, 197.

Chang, C.T., K.K. Chu and J.R. Hwang (1994). Application of the Generalized Stream Structure in HEN Synthesis. *Comp. Chem. Engng.* **18**, 345.

Chitra, S.P. and R. Govind (1985). Synthesis of Optimal Serial Reactor Structures for Homogeneous Reactions. I & II. *AIChE Jl.* **31**, 177.

Ciric, A.R. and C.A. Floudas (1990). A Mixed Integer Nonlinear Programming Model for Retrofitting Heat Exchanger Networks. *Ind. Eng. Chem. Res.* **29**, 239.

Ciric, A.R. and C.A. Floudas (1991). Heat Exchanger Network Synthesis without Decomposition. *Comp. Chem. Engng.* **15**, 385.

Ciric, A.R. and Deyao Gu (1994). Synthesis of Nonequilibrium Reactive Distillation Processes by MINLP Optimization. *AIChE Jl.* **40**, 1479.

Ciric, A.R. and P. Miao (1994). Steady State Multiplicities in an Ethylene Glycol Reactive Distillation Column. *Ind. Eng. Chem. Res.* **33**, 2738.

Ciric, A.R. and T. Jia (1991). Economic Sensitivity Analysis of Waste Treatment Cost in Source Reduction Projects: Continuous Optimization Problems. *AIChE Annual Meeting.*

Cohen, Y. and D. Allen (1992). An Integrated Approach to Process Waste Minimization Research. *Jl. of Hazardous Materials* **29**, 237.

Colberg, R.D. and M. Morari (1988). Analysis and Synthesis of Resilient Heat Exchanger Networks. *Advances in Chemical Engineering, J. Wei, Ed.*

Colberg, R.D. and M. Morari (1990). Area and Capital Cost Targets for Heat Exchanger Network Synthesis with Constrained Matches and Unequal Heat Transfer Coefficients. *Comp. Chem. Engng.* **14**, 1.

Daoutidis, P. and C. Kravaris (1992). Structural Evaluation of Control Configurations for Multivariable Nonlinear Processes. *Chem. Eng. Sci.* **47**, 1091.

Dimitriadis, V.D. and E.N. Pistikopoulos (1994). Flexibility Analysis of Dynamic Systems. *Accepted for publication in Ind. Eng. Chem. Res.*

Douglas, J.M. (1988). *Chemical Design of Chemical Processes.* McGrawHill.

Doyle, J.C. and G. Stein (1981). Multivariable Feedback Design - Concepts for a Classical Modern Synthesis. *IEEE Autom. Control* **26**, 4.

Duran, M.A. and I.E. Grossmann (1986). A Mixed Integer Nonlinear Programming Algorithm for Process Synthesis. *AIChE Jl.* **32**, 592.

El-Halwagi, M.M. (1992). Synthesis of Reverse Osmosis Networks for Waste Reduction. *AIChE Jl.* **38**, 1185.

El-Halwagi, M.M., A.M. El-Halwagi and V. Manousiouthakis (1992). Optimal Design of Dephenolization Networks for Petroleum Refinery Wastes. *Trans IChemE* **70**, 131.

El-Halwagi, M.M. and K. Srinivas (1992). Synthesis of Reactive Mass Exchange Networks. *Chem. Eng. Sci.* **47**, 2113.

El-Halwagi, M.M. and V. Manousiouthakis (1989). Synthesis of Mass Exchange Networks. *AIChE Jl.* **35**, 1233.

El-Halwagi, M.M. and V. Manousiouthakis (1990*a*). Automatic Synthesis of Mass Exchange Networks with Single Component Targets. *Chem. Eng. Sci.* **45**, 2813.

El-Halwagi, M.M. and V. Manousiouthakis (1990*b*). Simultaneous Synthesis of Mass Exchange and Regeneration Networks. *AIChE Jl.* **36**, 1209.

Floudas, C.A. (1987). Separation Synthesis of Multicomponent Feed Streams into Multicomponent Product Streams. *AIChE Jl.* **33**, 540.

Floudas, C.A. (1990). *OASIS: Discrete Continuous Optimization Approaches in Process Systems.* Computer Aided Systems Laboratory, Dept. of Chemical Engineering, Princeton UNiversity, USA.

Floudas, C.A. and A.R. Ciric (1988). Global Optimum Issues on Heat Exchanger Network Synthesis. *Proc. 3rd Int. Symp. on Process Systems Engineering.*

Floudas, C.A. and G.E. Paules IV (1988). A Mixed Integer Nonlinear Programming Formulation for the Synthesis of Heat Integrated Distillation Sequences. *Comp. Chem. Engng.* **12**, 531.

Floudas, C.A. and I.E. Grossmann (1986). Synthesis of Flexible Heat Exchanger Networks for Multiperiod Operation. *Comp. Chem. Engng.* **10**, 153.

Floudas, C.A. and I.E. Grossmann (1987). Automatic Generation of Multiperiod Heat Exchanger Network Configurations. *Comp. Chem. Engng.* **11**, 123.

Floudas, C.A. and V. Visweswaran (1990). A Global Optimization Algorithm (GOP) for Certain Classes of Nonconvex NLPs-I & II. *Comp. Chem. Engng.* **14**, 1397.

Floudas, C.A. and V. Visweswaran (1993). A Primal-Relaxed Dual Global Optimization Approach. *Jl. Optim. Theory Appl.* **78**, 187.

Floudas, C.A., A.R. Ciric and I.E. Grossmann (1986). Automatic Synthesis of Optimum Heat Exchanger Network Configurations. *AIChE Jl.* **32**, 276.

Flower, J.R., S.C. Bikos and S.W. Johnson (1993). Graphical Design Aids for Reduced Emissions. *ProcessTech'93, London.*

Friedler, F., K. Tarjan, Y.W. Huang and L.T. Fan (1993). Graph Theoretic Approach to Process Synthesis: Polynomial Algorithm for Maximal Structure Generation. *Comp. Chem. Engng.* **17**, 929.

Galli, M.R. and J. Cerda (1991). Synthesis of Flexible Heat Exchanger Networks - III. Temperature and Flowrate Variations. *Comp. Chem. Engng.* **15**, 7.

Garfinkel, R.S. and J.L. Nemhauser (1972). *Integer Programming.* John Wiley, New York.

Geoffrion, A.M. (1972). Generalized Benders Decomposition. *Jl. Optim. Theory Appl.* **10**, 237.

Georgiou, A. and C.A. Floudas (1989*a*). Optimization Model for Generic Rank Determination of Structural Matrices. *Int. J. Control* **49**, 1633.

Georgiou, A. and C.A. Floudas (1989*b*). Simultaneous Process Synthesis and Control: Minimization of Disturbance Propagation in Heat Exchanger Networks. *Presented at the International Conference on Foundations of Computer Aided Process Design (FOCAPD), Colorado.*

Georgiou, A. and C.A. Floudas (1989*c*). Structural Analysis and Synthesis of Feasible Control Systems. *Chem. Eng. Res. Des* **67**, 600.

Groep, M.E. (1993). *Incorporating Dynamic Controllability Aspects in the Synthesis Level of Heat Exchanger Networks.* Diploma Thesis. Imperial College.

Grossmann, I.E. and C.A. Floudas (1987). Active Constraint Strategy for Flexibility Analysis in chemical Processes. *Comp. Chem. Engng.* **11**, 675.

Grossmann, I.E. and M.M. Daichendt (1994). New Trends in Optimization-based Approaches in Process Synthesis. *Proceedings of PSE '94* p. 95.

Grossmann, I.E., A.W. Westerberg and L.T. Biegler (1987). Retrofit Design of Processes. *Proc. of 1st Int. Conf. on Foundations of Computer Aided Process Operations (FOCAPO), Park City, Utah.*

Gundersen, T. (1989). Retrofit Process Design. Research and Applications of Systematic Methods. *FOCAPO '89, Colorado.*

Gundersen, T. and L. Naess (1988). The Synthesis of Cost Optimal Heat Exchanger Networks. An industrial review of the state of the art. *Comp. Chem. Engng.* **12**, 503.

Gundersen, T., B. Sagli and K. Kiste (1991). *Computer-Oriented Process Engineering.* Chap. Problems in Sequential and Simultaneous Strategies for Heat Exchanger Network Synthesis. Elsevier Science, Amsterdam.

Gupta, A. and V. Manousiouthakis (1994). Waste Reduction Through Multicomponent Mass Exchange Network Synthesis. *Comp. Chem. Engng.* **S18**, S585.

Gustafson, S.A. (1983). *Semi-Infinite Programming and Applications.* Chap. A three-phase algorithm for semi-infinite programms, p. 138. Springer-Verlag, New York.

Halemane, K.P and I.E. Grossmann (1983). Optimal Process Design under Uncertainty. *AIChE Jl.* **29**, 425.

Hendry, J.E., D.F. Rudd and J.D. Seader (1973). Synthesis in the Design of Chemical Processes. *AIChE Jl.* **19**, 1.

Huang, Y.L. and L.T. Fan (1988). Strategy for enhancing Structural Controllability in Heat Exchanger Network Synthesis: A Knowledge Engineering Approach. *Presented at AIChE Meeting, Washington D.C.*

Johnston, R.D. and G.W. Barton (1985). Single Input Single Output Control System Synthesis. I. Application of Structural Analysis and the Development of Feedback Control Schemes. *Comp. Chem. Engng.* **9**, 547.

Johnston, R.D. and G.W. Barton (1987). Design and Performance Assessment of Control Systems using Singular Value Analysis. *Ind. Eng. Chem. Res.* **26**, 830.

Kocis, G.R. and I.E. Grossmann (1987). Relaxation Strategy for the Structural Optimization of Process Flowsheets. *Ind. Eng. Chem. Res.* **26**, 1869.

Kocis, G.R. and I.E. Grossmann (1989). A Modelling and Decomposition Strategy for the MINLP Optimization of Process Flowsheets. *Comp. Chem. Engng.* **13**, 797.

Kohl, A.L. (1987). *Handbook of Separation Process Technology.* Chap. Absorption and Stripping. John Wiley.

Kokossis, A.C. and C.A. Floudas (1991). Synthesis of Isothermal Reactor-Separator-Recycle Systems. *Chem. Eng. Sci.* **46**, 1361.

Kokossis, A.C. and C.A. Floudas (1994). Optimization of Complex Reactor Networks. II. Nonisothermal Operation. *Chem. Eng. Sci.* **49**, 1037.

Kotjabasakis, E. and B. Linnhoff (1986). Sensitivity Tables in the Design of Flexible Processes: 1. How much Contingency in Heat Exchanger Networks is Cost - Effective?. *Ind. Chem. Eng. Res. Des.* **64**, 197.

Kotjabasakis, E. and B. Linnhoff (1987). Better System Design reduces Heat Exchanger Fouling Costs. *Oil and Gas Jl.* **85**, 49.

Lannouette, K.H. (1977). Treatment of Phenolic Wastes. *Chem. Eng.* **84, Oct. 17**, 99.

Lenhoff, A.M. and M. Morari (1982). Design of Resilient Processing Plants-I:Process Design under Consideration of Dynamic Aspects. *Chem. Eng. Sci.* **37**, 245.

Lewis, W.L. and W.L. Martin (1967). Remove Phenols from Wastewater. *Hydrocarbon Process* **46**, 131.

Lin, C.T. (1976). Structural Controllability. *IEEE Trans. Autom. Control, AC-19* **19**, 201.

Linnhoff, B. and E. Kotjabasakis (1986). Downstream Paths for Operable Process Design. *Chem. Eng. Progr.* **82**, 23.

Luyben, M.L. and C.A. Floudas (1994). Analysinf the Interaction of Design and Control: A Multi-Objective Framework and Applications to Binary Distillation Synthesis. *Comp. Chem. Engng.* **18**, 933.

Madsen, K. and H. Schaer-Jacobsen (1978). Linearly Constrained Minimas Optimization. *Math. Prog.* **14**, 208.

Mathisen, K.W., and S. Skogestad (1992*a*). 'Design, Operation and Control of Resilient Heat Exchanger Networks. *Presented at AIChE Annual Meeting, Miami.*

Mathisen, K.W., M. Morari and S. Skogestad (1993). Dynamic Models for Heat Exchangers and Heat Exchanger Networks. *Comp. Chem. Engng. (Suppl.)* **18**, 459S.

Mathisen, K.W., S. Skogestad and T. Gundersen (1992*b*). Optimal Bypass Placement in Heat Exchanger Networks. *Presented at AIChE Spring Meeting, New Orleans.*

McAvoy, T.J. (1983). Some Results oon dynamic Interaction Analysis of Complex Control Systems. *Ind. Eng. Chem. Proc. Des. Dev.* **22**, 42.

Mohideen, M.J., J.D. Perkins and E.N. Pistikopoulos (1995). A Framework for Incorporating Flexibility and Controllability in Process Design. *To be presented in European Control Conference '95.*

Morari, M. and G. Stephanopoulos (1980). Studies in the Synthesis of Control Structures for Chemical Processes. Part II: Structural Aspects and the Synthesis of Alternative Feasible Control Schemes. *AIChE Jl.* **26**, 232.

Narraway, L.T. and J.D. Perkins (1993). Selection of Process Control Structure based on Linear Dynamic Economics. *Ind. Eng. Chem. Res.* **32**, 2681.

Narraway, L.T., J.D. Perkins and G.W. Barton (1991). Interaction between Process Design and Process Control: Economic Analysis of Process Dynamics. *Jl. of Process Control.*

Nishida, N., G. Stephanopoulos and A.W. Westerberg (1981). A Review of Process Synthesis. *AIChE Jl.* **27**, 321.

Palazoglu, A. and Y. Arkun (1986). A Multiobjective Approach to Design Chemical Plants with Robust Dynamic Operability Characteristics. *Comp. Chem. Engng.* **10**, 00.

Papoulias, S.A. and I.E. Grossmann (1983). A Structural Optimization Approach in Process Synthesis. II. Heat Recovery Networks. *Comp. Chem. Engng.* **7**, 723.

Paterson, W.A. (1984). A Replacement for the Logarithmic Mean. *Chem. Eng. Sci.* **39**, 635.

Paules IV, G.E. and C.A. Floudas (1989). APROS: Algorithmic Development Methodology for Discrete Continuous Optimization Problems. *Oper. Res.* **37**, 902.

Perkins, J.D. and M.P.F. Wong (1985). Assessing Controllability of Chemical Plants. *Chem. Eng. Res. Des.* **63**, 358.

Peters, M.S. and K.D. Timmerhaus (1981). *Plant Design and Economics for Chemical Engineers.* McGrawHill.

Pho, T.K. and L. Lapidus (1973). Topics in Computer Aided Design. Part II. Synthesis of Optimal Heat exchanger Networks by Tree Searching Algorithms. *AIChE Jl.* **19**, 1182.

Pistikopoulos, E.N. and I.E. Grossmann (1988). Optimal Retrofit Design for improving Process Flexibility in Linear Systems. *Comp. Chem. Engng.* **12**, 719.

Pistikopoulos, E.N. and I.E. Grossmann (1989). Optimal Retrofit Design for improving Process Flexibility in Noninear Systems-I. Fixed Degree of Flexibility. *Comp. Chem. Engng.* **13**, 1003.

Pistikopoulos, E.N. and T.A. Mazzuchi (1990). A Novel Flexibility Index Analysis Approach for Processes with Stochastic Parameters. *Comp. Chem. Engng.* **14**, 991.

Quesada, I. and I.E. Grossmann (1993). Global Optimization Algorithm of Process Networks with Multicomponent Flows. *AIChE Annual Meeting, St. Louis.*

Raman, R. and I.E. Grossmann (1993). Symbolic Integration of Logic in Mixed Integer Linear Programming Techniques for Process Synthesis. *Comp. Chem. Engng.* **17**, 909.

Rigg, T.J. and R.E. Swaney (1994). Synthesis of General Equilibrium-based Separation Processes Using a Network Flow Model. *Proceedings of PSE'94* p. 55.

Saboo, A.K. and M. Morari (1984). Design of Resilient Processing Plants: IV. Some New Results on Heat Exchanger Network Synthesis. *Chem. Eng. Sci.* **39**, 579.

Saboo, A.K., M. Morari and D.C. Woodcock (1985). Design of Resilient Processing Plants: VIII. A Resilience Index for Heat Exchanger Networks. *Chem. Eng. Sci.* **40**, 1553.

Sargent, R.W.H. and K. Gaminibandara (1976). *Optimization in Action.* Chap. Introduction: Approaches to Chemical Process Synthesis, p. 531. Vol. 12. Ed. by L.C.W. DIxon, Academic Press, London.

Siirola, J.J. (1994). An Industrial Perspective on Process Synthesis. *FOCAPD.*

Skogestad, S. and M. Morari (1987). Implications of Large RGA Elements on Control Performance. *Ind. Eng. Chem. Res.* **26**, 2323.

Srinivas, B.K. and M.M. El-Halwagi (1993). Optimal Design of Pervaporation Systems for Waste Reduction. *Comp. Chem. Engng.* **17**, 957.

Straub, D.A. and I.E. Grossmann (1990). Integrated Stochastic Metric of Flexibility for Systems with Discrete State and Continuous Parameter Uncertainties. *Comp. Chem. Engng.* **14**, 967.

Swaney, R.E. and I.E. Grossmann (1985). An Index for Operational Flexibility in Chemical Process Design - I & II. *AIChE Jl.* **31**, 621.

Trivedi, K.K., J.R. Roach and B.K. O'Neill (1987). Shell Targetting in Heat Exchanger Networks. *AIChE Jl.* **33**, 2087.

Varga, E.I. and K.M. Hangos (1993). The Effect of the Heat Exchanger Network Topology on the Network Control Properties. *Control Eng. Practice.*

Walsh, S. and J.D. Perkins (1992). Integrated Design of Effluent Treatment Systems. *Interactions between Process Design and Process Control, IFAC Workshop, London UK, Ed. by J.D. Perkins.*

Wehe, R.P. and A.W. Westerberg (1987). An Algorithmic Procedure for the Synthesis of Distillation Sequences with Bypass. *Comp. Chem. Engng.* **11**, 619.

Westerberg, A.W. (1985). The Synthesis of Distillation-based Separation Systems. *Comp. Chem. Engng.* **9**, 421.

Yee, T.F. and I.E. Grossmann (1987). Optimization Model for Structural Modifications in the Retrofit of Heat Exchanger Networks. *Proc. of 1st Int. Conf. on Foundations of Computer Aided Process Operations (FOCAPO), Park City, Utah.*

Yee, T.F. and I.E. Grossmann (1990). Simultaneous Optimization Models foor Heat Integration, II: Heat Exchanger Network Synthesis. *Comp. Chem. Engng.* **14**, 1165.

Yee, T.F. and I.E. Grossmann (1991). A Screening and Optimization Approach for the Retrofit of Heat Exchanger Networks. *Ind. Eng. Chem. Res.* **30**, 146.

Referenced Papers from this Thesis

- Papalexandri, K.P. and E.N. Pistikopoulos (1993). An MINLP retrofit approach for improving the flexibility of heat exchanger networks. *Annals of Oper. Res.*. **42**, 119.

- Papalexandri, K.P. and E.N. Pistikopoulos (1994). Synthesis and Retrofit Design of Operable Heat Exchanegr Networks. 1. Flexibility and Structural Controllability Aspects. *Ind. Eng. Chem. Res.* **33**, 1718.

- Papalexandri, K.P. and E.N. Pistikopoulos (1994). Synthesis and Retrofit Design of Operable Heat Exchanegr Networks. 2. Dynamics and Control Structure Considerations. *Ind. Eng. Chem. Res.* **33**, 1738.

- Papalexandri, K.P. and E.N. Pistikopoulos (1994). Synthesis of Cost-Optimal and Controllable Heat Exchanger Networks. *Chem. Eng. Res. Des.* **72**, 350.

- Papalexandri, K.P., E.N. Pistikopoulos and C.A. Floudas (1994). Mass-Exchange Networks for Waste Minimization. A Simultaneous Approach. *Chem. Eng. Res. Des.* **72**, 279.

- Papalexandri, K.P. and E.N. Pistikopoulos (1994). A Multiperiod MINLP Model for the Synthesis of Flexible Heat and Mass Exchange Networks. *Comp. Chem. Engng.* **18**, 1125.

- Papalexandri, K.P. and E.N. Pistikopoulos (1994). A Generalized Framework for Process Synthesis based on Mass/Heat Transfer Principles.. *Accepted for publication in AIChE Jl.*

Unpublished Reports

- Papalexandri, K.P., T.V. Thomaidis and E.N. Pistikopoulos (1994). Integrated Process Design for a BP Industrial Case-Study. Part I, II, III. Confidential Report.

Appendix A

Flexibility Analysis of HENs

Consider a heat exchanger network involving a set **H** of hot streams, a set **C** of cold streams and sets **HU** and **CU** of hot and cold utilities respectively. The network consists of **E** exchangers. Let us denote:

$$\mathbf{E}_i = \{e \in \mathbf{E}, /hot\ stream\ i\ exchanges\ heat\ in\ e\}$$

$$\mathbf{E}_j = \{e \in \mathbf{E}, /cold\ stream\ j\ exchanges\ heat\ in\ e\}$$

$$\mathbf{S}_e^h = \{e' \in \mathbf{E}, e' \neq e\ and\ \exists\ a\ hot\ bypass\ from\ e'\ to\ e\}$$

$$\mathbf{S}_e^c = \{e' \in \mathbf{E}, e' \neq e\ and\ \exists\ a\ cold\ bypass\ from\ e'\ to\ e\}$$

Consider also that the heat flowrates and the inlet temperatures of the hot and cold streams, $\mathbf{F_i}, \mathbf{F_j}, \mathbf{T^I_i}, \mathbf{T^I_j}$ respectively and/or the heat transfer coefficients **U** vary within specified range of uncertainty, as follows:

$$\mathbf{F}_i^{LO} \leq \mathbf{F}_i \leq \mathbf{F}_i^{UP}$$
$$\mathbf{F}_j^{LO} \leq \mathbf{F}_j \leq \mathbf{F}_j^{UP}$$
$$\mathbf{T^I}_i^{LO} \leq \mathbf{T^I}_i \leq \mathbf{T^I}_i^{UP}$$
$$\mathbf{T^I}_j^{LO} \leq \mathbf{T^I}_j \leq \mathbf{T^I}_j^{UP}$$
$$\mathbf{U}_e^{LO} \leq \mathbf{U}_e \leq \mathbf{U}_e^{UP}$$

Employing the notation of Table A.1, the network can in general be be described in the following way:

$$\sum_{e \in E_i} f_{ie}^{S} + f_i^{exit} - \mathbf{F}_i = 0 \quad i \in H \tag{A.1}$$

$$\sum_{e \in E_j} f_{je}^{S} + f_j^{exit} - \mathbf{F}_j = 0 \quad j \in C \tag{A.2}$$

$$\sum_{i \in H s.t. e \in E_i} f_{ie}^{S} + \sum_{e' \in S_e^h} f_{ee'}^{BYh} - f_e^{TOh} = 0 \quad e \in E_i \tag{A.3}$$

$$\sum_{j \in C s.t. e \in E_j} f_{je}^{S} + \sum_{e' \in S_e^c} f_{ee'}^{BYc} - f_e^{TOc} = 0 \quad e \in E_j \tag{A.4}$$

$$f_e^{TOh} - f_e^{INh} - f_e^{EXh} = 0 \quad e \in E \tag{A.5}$$

$$f_e^{TOc} - f_e^{INc} - f_e^{EXc} = 0 \quad e \in E \tag{A.6}$$

$$\sum_{i \in H s.t. e \in E_i} f_{ie}^{Oh} + \sum_{e' \in E, e \in S_{e'}} f_{e'e}^{BYh} - f^{TOh} = 0 \quad e \in E_i \tag{A.7}$$

$$\sum_{j \in C s.t. e \in E_j} f_{je}^{Oc} + \sum_{e' \in E, e \in S_{e'}} f_{e'e}^{BYc} - f^{TOc} = 0 \quad e \in E_j \tag{A.8}$$

$$\sum_{i \in H s.t. e \in E_i} \mathbf{T}^i f_{ie}^{S} + \sum_{e' \in S_e^h} f_{ee'}^{BYh} t_{e'}^{FOh} - f_e^{TOh} t_e^{Ih} = 0 \quad e \in E_i \tag{A.9}$$

$$\sum_{j \in C s.t. e \in E_j} \mathbf{T}^j f_{je}^{S} + \sum_{e' \in S_e^c} f_{ee'}^{BYc} t_{e'}^{FOc} - f_e^{TOc} t_e^{Ic} = 0 \quad e \in E_j \tag{A.10}$$

$$f_e^{EXh} t_e^{Ih} + f_e^{INh} t_e^{Oh} - f_e^{TOh} t_e^{FOh} = 0 \quad e \in E \tag{A.11}$$

$$f_e^{EXc} t_e^{Ic} + f_e^{INc} t_e^{Oc} - f_e^{TOc} t_e^{FOc} = 0 \quad e \in E \tag{A.12}$$

$$Q_e - f_e^{INh}(t_e^{Ih} - t_e^{Oh}) = 0 \quad e \in E \tag{A.13}$$

$$Q_e - f_e^{INc}(t_e^{Oc} - t_e^{Ic}) = 0 \quad e \in E \tag{A.14}$$

$$DT1_e = t_e^{Ih} - t_e^{Oc} \quad e \in E \tag{A.15}$$

$$DT2_e = t_e^{Oh} - t_e^{Ic} \quad e \in E \tag{A.16}$$

$$LMTD_e = \frac{(t_e^{Ih} - t_e^{Oc}) - (t_e^{Oh} - t_e^{Ic})}{\ln \frac{t_e^{Ih} - t_e^{Oc}}{t_e^{Oh} - t_e^{Ic}}} \quad e \in E \tag{A.17}$$

$$Q_e - A_e U_e LMTD_e \leq 0 \quad e \in E \tag{A.18}$$

$$-DT1_e + \Delta T_{min} \leq 0 \quad e \in E \tag{A.19}$$

$$-DT2_e + \Delta T_{min} \leq 0 \quad e \in E \tag{A.20}$$

$$\sum_{e \in E_i} f_{ie}^{Oh} t_e^{FOh} + f_i^{exit} \mathbf{T^I}_i - \mathbf{F}_i \mathbf{T^O}_i = 0 \quad i \in H \tag{A.21}$$

$$\sum_{e \in E_j} f_{je}^{Oc} t_e^{FOc} + f_j^{exit} \mathbf{T^I}_j - \mathbf{F}_j \mathbf{T^O}_j = 0 \quad j \in C \tag{A.22}$$

The flexibility of the HEN can then be evaluated by applying the active set strategy formulation of Floudas and Grossmann (1987). Let μ_k be the Lagrange multiplier of the kth equation, where k=(A.1) - (A.17), (A.21), (A.22), λ^d the vector of multipliers of inequality constraints (A.18) and λ^1 and λ^2 the Lagrange multipliers of constraints (A.19) and (A.20) respectively. The FI of the HEN is then determined from the following MINLP problem (**FAP**):

(FAP):

$$FI = \min \delta$$

s.t. A.1 - A.22

$$\mu_i^1 + \mu_e^3 + \mu_e^9 \mathbf{T^I}_i = 0 \quad i \in H,\ e \in E_i \tag{A.23}$$

$$\mu_j^2 + \mu_e^4 + \mu_e^{10} \mathbf{T^I}_j = 0 \quad j \in C,\ e \in E_j \tag{A.24}$$

$$\mu_i^1 + \mu_i^{21} \mathbf{T^I}_i = 0 \quad i \in H \tag{A.25}$$

$$\mu_j^2 + \mu_i^{22} \mathbf{T^I}_j = 0 \quad j \in C \tag{A.26}$$

$$\mu_e^3 + \mu_{e'}^7 + \mu_e^9 t_{e'}^{FOh} = 0 \quad e \in E,\ e' \in S_e \tag{A.27}$$

$$\mu_e^4 + \mu_{e'}^8 + \mu_e^{10} t_{e'}^{FOc} = 0 \quad e \in E,\ e' \in S_e \tag{A.28}$$

$$-\mu_e^3 + \mu_e^5 - \mu_e^7 - \mu_e^9 t_e^{Ih} - \mu_e^{11} t_e^{FOh} = 0 \quad e \in E \tag{A.29}$$

$$-\mu_e^4 + \mu_e^6 - \mu_e^8 - \mu_e^{10} t_e^{Ic} - \mu_e^{12} t_e^{FOc} = 0 \quad e \in E \tag{A.30}$$

$$-\mu_e^5 + \mu_e^{11} t_e^{Oh} - \mu_e^{13} (t_e^{Ih} - t_e^{Oh}) = 0 \quad e \in E \tag{A.31}$$

$$-\mu_e^6 + \mu_e^{12} t_e^{Oc} - \mu_e^{14} (t_e^{Oc} - t_e^{Ic}) = 0 \quad e \in E \tag{A.32}$$

$$-\mu_e^5 + \mu_e^{11} t_e^{Ih} = 0 \quad e \in E \tag{A.33}$$

$$-\mu_e^6 + \mu_e^{12} t_e^{Ic} = 0 \quad e \in E \tag{A.34}$$

$$\mu_e^7 + \mu_i^{21} t_e^{FOh} = 0 \quad e \in E_i,\ i \in H \tag{A.35}$$

$$\mu_e^8 + \mu_j^{22} t_e^{FOc} = 0 \quad e \in E_j,\ j \in C \tag{A.36}$$

$$-\mu_e^9 f_e^{TOh} + \mu_e^{11} f_e^{EXh} - \mu_e^{13} f_e^{INh} - \mu_e^{15} = 0 \quad e \in E_i,\ i \in H \tag{A.37}$$

$$-\mu_e^{10} f_e^{TOc} + \mu_e^{12} f_e^{EXc} + \mu_e^{14} f_e^{INc} + \mu_e^{16} = 0 \quad e \in E_j,\ j \in C \tag{A.38}$$

$$\mu_e^{11} f_e^{INh} + \mu_e^{13} f_e^{INh} - \mu_e^{16} = 0 \quad e \in E_i,\ i \in H \tag{A.39}$$

$$\mu_e^{12} f_e^{INc} - \mu_e^{14} f_e^{INc} + \mu_e^{15} = 0 \quad e \in E_j,\ j \in C \tag{A.40}$$

$$\sum_{e' \in E, e \in S_{e'}} \mu_e^9 f_{e'e}^{BYh} - \mu_e^{11} f_e^{TOh} + \mu_i^{21} f_e^{Oh} = 0 \quad e \in E_i,\ i \in H \tag{A.41}$$

$$\mu_e^{13} + \mu_e^{14} + \lambda_e^D = 0 \quad e \in E \tag{A.42}$$

$$\mu_e^{15} - \lambda_e^1 - \mu^{17} \frac{\partial(LMTD)}{\partial(DT1)} = 0 \quad e \in E \tag{A.43}$$

$$\mu_e^{16} - \lambda_e^2 - \mu^{17} \frac{\partial(LMTD)}{\partial(DT1)} = 0 \quad e \in E \tag{A.44}$$

$$\mu_e^{17} - \lambda_e^d A_e U_e = 0 \quad e \in E \tag{A.45}$$

$$\sum_e (\lambda_e^d + \lambda_e^1 + \lambda_e^2) = 1 \tag{A.46}$$

$$Q_e - A_e U_e LMTD_e + \alpha_e^d = 0 \qquad e \in E \tag{A.47}$$

$$-DT1_e + \Delta T_{min} + \alpha_e^1 = 0 \qquad e \in E \tag{A.48}$$

$$-DT2_e + \Delta T_{min} + \alpha_e^2 = 0 \qquad e \in E \tag{A.49}$$

$$\lambda_e^d - y_e^d \leq 0 \qquad e \in E \tag{A.50}$$

$$\lambda_e^1 - y_e^1 \leq 0 \qquad e \in E \tag{A.51}$$

$$\lambda_e^2 - y_e^2 \leq 0 \qquad e \in E \tag{A.52}$$

$$\alpha_e^d + M(1 - y_e^d) \leq 0 \qquad e \in E \tag{A.53}$$

$$\alpha_e^1 + M(1 - y_e^1) \leq 0 \qquad e \in E \tag{A.54}$$

$$\alpha_e^2 + M(1 - y_e^2) \leq 0 \qquad e \in E \tag{A.55}$$

$$\sum_e (y_e^D + y_e^1 + y_e^2) \leq n_z + 1 \tag{A.56}$$

$$\mathbf{F}_i^{nom} - \delta\Delta\mathbf{F}_i^- \leq \mathbf{F}_i \leq \mathbf{F}_i^{nom} + \delta\Delta\mathbf{F}_i^+ \qquad i \in H \tag{A.57}$$

$$\mathbf{F}_j^{nom} - \delta\Delta\mathbf{F}_j^- \leq \mathbf{F}_j \leq \mathbf{F}_j^{nom} + \delta\Delta\mathbf{F}_j^+ \qquad j \in C \tag{A.58}$$

$$\mathbf{T}^{\mathbf{I}}{}_i^{nom} - \delta\Delta\mathbf{T}^{\mathbf{I}}{}_i^- \leq \mathbf{T}^{\mathbf{I}}{}_i \leq \mathbf{T}^{\mathbf{I}}{}_i^{nom} + \delta\Delta\mathbf{T}^{\mathbf{I}}{}_i^+ \qquad i \in H \tag{A.59}$$

$$\mathbf{T}^{\mathbf{I}}{}_j^{nom} - \delta\Delta\mathbf{T}^{\mathbf{I}}{}_j^{-} \leq \mathbf{T}^{\mathbf{I}}{}_j \leq \mathbf{T}^{\mathbf{I}}{}_j^{nom} + \delta\Delta\mathbf{T}^{\mathbf{I}}{}_j^{+} \qquad j \in C \tag{A.60}$$

$$\mathbf{U}_e^{nom} - \delta\Delta\mathbf{U}_e^{-} \leq \mathbf{U}_e \leq \mathbf{U}_e^{nom} + \delta\Delta\mathbf{U}_e^{+} \qquad e \in E \tag{A.61}$$

where $\alpha_e^d, \alpha_e^1, \alpha_e^2$ are the slack variables considered for inequality constraints (A.18), (A.19) and (A.20) respectively, and n_z is the degrees of freedom of the considered heat exchanger network. Problem (**FAP**) is in general a mixed-integer nonlinear programming (MINLP) problem, involving nonconvex terms.

Feasible operation of the network within the uncertainty parameter range can be determined through the solution of the *feasibility test* problem (Grossmann and Floudas, 1987), which also is a MINLP problem: **(FAP′):**

$$\max u$$

$$\text{s.t.} \qquad \text{A.1 - A.17, A.21-A.56}$$

$$Q_e - A_e U_e LMTD_e \leq u \qquad e \in E \tag{A.62}$$

$$-DT1_e + \Delta T_{min} \leq u \qquad e \in E \tag{A.63}$$

$$-DT2_e + \Delta T_{min} \leq u \qquad e \in E \tag{A.64}$$

$$\mathbf{F}_i^{nom} - \Delta\mathbf{F}_i^{-} \leq \mathbf{F}_i \leq \mathbf{F}_i^{nom} + \Delta\mathbf{F}_i^{+} \qquad i \in H \tag{A.65}$$

$$\mathbf{F}_j^{nom} - \Delta\mathbf{F}_j^{-} \leq \mathbf{F}_j \leq \mathbf{F}_j^{nom} + \Delta\mathbf{F}_j^{+} \qquad j \in C \tag{A.66}$$

$$\mathbf{T}^{\mathbf{I}}{}_i^{nom} - \Delta\mathbf{T}^{\mathbf{I}}{}_i^{-} \leq \mathbf{T}^{\mathbf{I}}{}_i \leq \mathbf{T}^{\mathbf{I}}{}_i^{nom} + \Delta\mathbf{T}^{\mathbf{I}}{}_i^{+} \qquad i \in H \tag{A.67}$$

$$\mathbf{T}^{\mathbf{I}}{}_j^{nom} - \Delta\mathbf{T}^{\mathbf{I}}{}_j^{-} \leq \mathbf{T}^{\mathbf{I}}{}_j \leq \mathbf{T}^{\mathbf{I}}{}_j^{nom} + \Delta\mathbf{T}^{\mathbf{I}}{}_j^{+} \qquad j \in C \tag{A.68}$$

$$\mathbf{U}_e^{nom} - \Delta\mathbf{U}_e^{-} \leq \mathbf{U}_e \leq \mathbf{U}_e^{nom} + \Delta\mathbf{U}_e^{+} \qquad e \in E \tag{A.69}$$

where λ^d, λ^1 and λ^2 are now the Lagrange multipliers of (A.62), (A.63) and (A.64) respectively. The solution of problem (**FAP′**) provides the maximum constraint violation within the specified uncertainty space and the corresponding operating conditions.

f_{ke}^{S}	flow of stream k from initial stream splitter towards exchanger e
f_{k}^{exit}	flow of stream k from initial stream splitter towards its final mixer
$f_{ee'}^{BYh}$	Hot bypass stream from exchanger e' to e
$f_{ee'}^{BYc}$	Cold bypass stream from exchanger e' to e
f_{e}^{TOh}	Hot stream flow towards exchanger e
f_{e}^{TOc}	Cold stream flow towards exchanger e
f_{e}^{INh}	Hot stream flow through exchanger e
f_{e}^{INc}	Cold stream flow through exchanger e
f_{e}^{EXh}	Hot stream flow bypassing exchanger e
f_{e}^{EXc}	Cold stream flow bypassing exchanger e
f_{ei}^{Oh}	Hot outlet flow from exchanger e towards final mixer of stream i
f_{ej}^{Oc}	Cold outlet flow from exchanger e towards final mixer of stream j
t_{e}^{Ih}	Hot inlet temperature to exchanger e
t_{e}^{Ic}	Cold inlet temperature to exchanger e
t_{e}^{Oh}	Hot outlet temperature from exchanger e
t_{e}^{Oc}	Cold outlet temperature from exchanger e
t_{e}^{FOh}	Hot final outlet temperature from exchanger e
t_{e}^{FOc}	Cold final outlet temperature from exchanger e
$DT1_e$	Hot-cold temperature difference at hot inlet of exchanger e
$DT2_e$	Hot-cold temperature difference at hot outlet of exchanger e
$LMTD_e$	Logarithmic mean temperature difference at exchanger e
Q_E	Heat load of exchanger e
A_e	Area of exchanger e

Table A.1: Nomenclature for Problem (FAP).

Appendix B

Multiperiod Synthesis/Retrofit Model

To formulate the multiperiod hyperstructure model the following sets are introduced:

$$\mathbf{HT} = \mathbf{H} \cup \mathbf{HU}$$

$$\mathbf{CT} = \mathbf{C} \cup \mathbf{CU}$$

$$\mathbf{HCT} = (\mathbf{HT}) \cup (\mathbf{CT})$$

$$\mathbf{T} = \{\mathbf{t} : \mathbf{period\ of\ operation}\}$$

$$\mathbf{IS^t} = \{\mathbf{s} : \mathbf{\text{“}subnetwork\text{”}\ at\ period\ t}\}$$

The **heat flow model** can be represented by the multiperiod transshipment model proposed by Floudas and Grossmann (1986). The notation of Table B.1 will be used. The mathematical formulation of the heat flow model consists of:

- Energy balances for each stream over each temperature interval at each time period.

$$R_{ilt} - R_{i,l-1,t} + \sum_{j \in CT_{lt}} q_{ijlt} = \mathbf{Q^H}_{ilt}, \quad i \in HT_{lt},\ l \in IT_t,\ t = 1, \ldots, N \tag{B.1}$$

$$\sum_{i \in HT_{lt}} q_{ijlt} = \mathbf{Q^C}_{jlt} \qquad j \in CT_{lt}, l \in IT_t, t = 1, \ldots, N \tag{B.2}$$

- An evaluation of the total heat that two streams exchange in each subnetwork of each time period.

$$\sum_{l \in IT_t} q_{ijlt} = \sum_{s_t \in IS_t} Q_{ijst} \qquad i \in HT,\ j \in CT,\ s_t \in IS_t,\ t = 1, \ldots, N \tag{B.3}$$

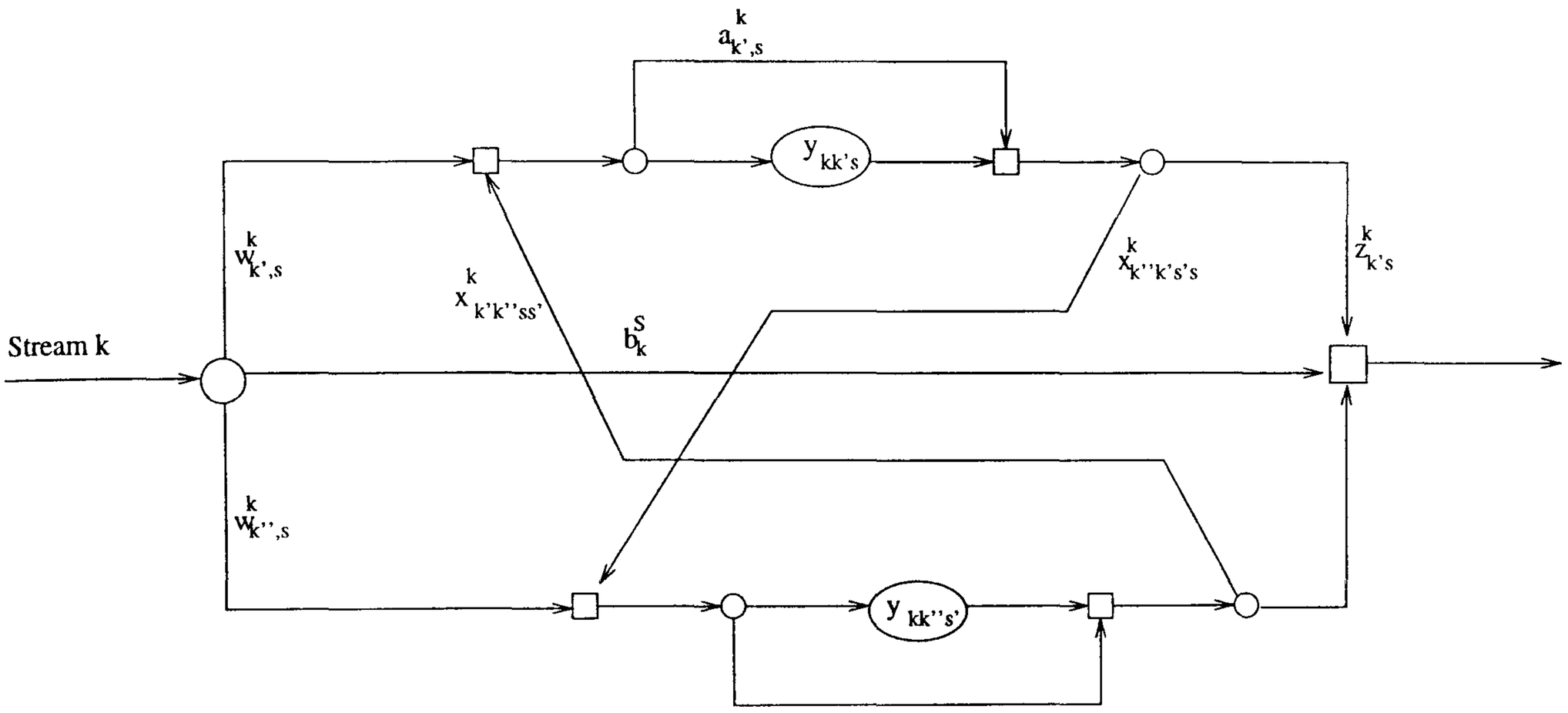

Figure B.1: Hyperstructure network representation through binary variables

- $R_{ilt} \geq 0$, $q_{ijlt} \geq 0$

In order to formulate the **multiperiod hyperstructure model** (*one-to-one stream matchexchanger assignment*) also define (see Figure B.1):

$\mathbf{PM^t} = \{(i,j)/$ the pair (i,j) can be present at period of operation t$\}$

$R_k = \{k'/$ if $k \in HP$ then $k' \in C$ $\&(k,k') \in PM$,

or $k \in CP$ then $k' \in H$ $\&(k,k') \in PM\}$

$S_{kk'} = \{k''/k' \in R_k, k'' \in R_k$ and the bypass flow of k from (k,k') to (k.k") is possible$\}$

Employing the notation of Figure B.1 and of Tables B.2 and B.3, the model consists of:

- Mass balances for each stream at the splitters and mixers of the hyperstructure, for each period of operation:

$$\sum_{s \in IS} \sum_{k' \in R_k} f_{k't}^{I,k,s} + f_t^{S,k} = \mathbf{F}^{k,t} \qquad k \in HCT;\ t \in \mathbf{T} \tag{B.4}$$

$$f^{I,k,s}_{k',t} + \sum_{k'' \in S_{kk'}} f^{B,k,s,s}_{k',k'',t} + \sum_{s' \in IS} \sum_{k'' \in R_k} f^{B,k,s,s'}_{k',k'',t} - f^{T,k,s}_{k',t} = 0 \qquad k \in HCT, k' \in R_k, s \in IS,\ t \in \mathbf{T} \tag{B.5}$$

$$f^{T,k,s}_{k',t} - f^{E,k,s}_{k',t} - f^{EX,k,s}_{k',t} = 0 \qquad k \in HCT, k' \in R_k, s \in IS,\ t \in \mathbf{T} \tag{B.6}$$

$$f^{O,k,s}_{k',t} + \sum_{k'' \in S_{kk''}} f^{B,k,s,s}_{k'',k',t} + \sum_{s' \in IS} \sum_{k'' \in R_k} f^{B,k,s,s'}_{k'',k',t} - f^{T,k,s}_{k',t} = 0 \qquad k \in HCT, k' \in R_k, s \in IS,\ t \in \mathbf{T} \tag{B.7}$$

- Energy balances at the mixers of the hyperstructure of each process stream prior to heat exchangers, for each period of operation.

$$\mathbf{T}^{I,k,t} f^{I,k,s}_{k',t} + \sum_{k'' \in S_{kk''}} f^{B,k,s,s}_{k',k'',t} t^{FO,k,s}_{k'',t} + \sum_{s \in IS} \sum_{k'' \in R_k} f^{B,k,s,s'}_{k',k'',t} t^{FO,k,s'}_{k'',t}$$

$$- f^{T,k,s}_{k',t} t^{I,k,s}_{k',t} = 0 \qquad k \in HCT, k' \in R_k, s \in IS,\ t \in \mathbf{T} \tag{B.8}$$

- Energy balances over the exchangers for the hot and cold streams, for each period of operation.

$$Q_{ijst} - f^{E,i,s}_{j,t}(t^{I,i,s}_{j,t} - t^{O,i,s}_{j,t}) = 0 \qquad i \in H, j \in R_i, s \in IS,\ t \in \mathbf{T} \tag{B.9}$$

$$Q_{ijst} - f^{E,j,s}_{i,t}(t^{O,j,s}_{i,t} - t^{I,j,s}_{i,t}) = 0 \qquad j \in C, i \in R_j, s \in IS,\ t \in \mathbf{T} \tag{B.10}$$

Constraint (B.11) defines the existence of a heat exchange match between ijs:

$$Q_{ijst} - \mathbf{M} y_{ijs} \leq 0 \qquad (i,j) \in PM;\ t \in \mathbf{T} \tag{B.11}$$

- The following equations define the log-mean difference between two streams that exchange heat.

$$DT1_{ijst} = t^{I,i,s}_{j,t} - t^{O,j,s}_{i,t} \qquad i \in H, j \in R_i, s \in IS,\ t \in \mathbf{T} \tag{B.12}$$

$$DT2_{ijst} = t^{O,i,s}_{j,t} - t^{I,j,s}_{i,t} \qquad i \in H, j \in R_i, s \in IS,\ t \in \mathbf{T} \tag{B.13}$$

$$LMTD_{ijst} = \frac{DT1_{ijst} - DT2_{ijst}}{\ln \dfrac{DT1_{ijst}}{DT2_{ijst}}} \qquad i \in H, j \in R_i, s \in IS,\ t \in \mathbf{T} \tag{B.14}$$

- Design equations for the heat exchangers.

$$A_{ijs} \geq \frac{Q_{ijst}}{U_{ijt} LMTD_{ijst}} \qquad i \in H, j \in R_i, s \in IS,\ t \in \mathbf{T} \tag{B.15}$$

To avoid computational awkwardness equation the log-mean temperature difference is approximated by the formula proposed by Paterson (1984).

- Energy balances at the mixers of the hyperstructure of each process stream (i) after the exchangers, and (ii) at the final mixer, for each period of operation.

$$f_{k',t}^{EX,k,s} t_{k',t}^{I,k,s} + f_{k',t}^{E,k,s} t_{k',t}^{O,k,s} - f_{k',t}^{T,k,s} t_{k',t}^{FO,k,s} = 0 \qquad k \in HCT, k' \in R_k, s \in IS,\ t \in \mathbf{T} \quad \text{(B.16)}$$

$$\sum_{s \in IS} \sum_{k' \in R_k} f_{k',t}^{O,k,s} t_{k',t}^{FO,k,s} + f_t^{S,k} \mathbf{T}^{I,k,t} - \mathbf{F}^{k,t} \mathbf{T}^{O,k} = 0 \quad k \in HCT,\ t \in \mathbf{T} \quad \text{(B.17)}$$

- The following constraints give an upper bound to the flow of a stream to and through an exchanger respectively and ensure that such a flow is not present if the corresponding match does not exists ($y_{ijs} = 0$). If the match (i, j) is selected then the flow of the hot and the cold stream through the exchanger is bounded from a minimum based on the heat load and the corresponding maximum temperature drop. This is described by the constraints in (B.18)-(B.23). The constraints in (B.24) and (B.25) account for feasible operation for each period of operation.

$$f_{j,t}^{T,i,s} - \mathbf{F}^{i,t} y_{ijs} \leq 0 \qquad i \in H, j \in R_i, s \in IS,\ t \in \mathbf{T} \quad \text{(B.18)}$$

$$f_{i,t}^{T,j,s} - \mathbf{F}^{j,t} y_{ijs} \leq 0 \qquad j \in C, i \in R_j, s \in IS,\ t \in \mathbf{T} \quad \text{(B.19)}$$

$$f_{j,t}^{E,i,s} - \mathbf{F}^{i,t} y_{ijs} \leq 0 \qquad i \in H, j \in R_i, s \in IS,\ t \in \mathbf{T} \quad \text{(B.20)}$$

$$f_{i,t}^{E,j,s} - \mathbf{F}^{j,t} y_{ijs} \leq 0 \qquad j \in C, i \in R_j, s \in IS,\ t \in \mathbf{T} \quad \text{(B.21)}$$

$$f_{j,t}^{E,i,s} - \frac{Q_{ijst}}{\Delta T_{ijmax}^{st}} \geq 0 \qquad i \in H, j \in R_i, s \in IS,\ t \in \mathbf{T} \quad \text{(B.22)}$$

$$f_{i,t}^{E,j,s} - \frac{Q_{ijst}}{\Delta T_{ijmax}^{st}} \geq 0 \qquad j \in C, i \in R_j, s \in IS,\ t \in \mathbf{T} \quad \text{(B.23)}$$

$$DT1_{ijst} \geq \Delta Tmin \qquad i \in H, j \in R_i, s \in IS,\ t \in \mathbf{T} \quad \text{(B.24)}$$

$$DT2_{ijst} \geq \Delta Tmin \qquad j \in C, i \in R_j, s \in IS,\ t \in \mathbf{T} \quad \text{(B.25)}$$

- The following constraints provide an upper bound to stream flows to and from heat exchangers and bypass flows. When the corresponding piping segments do not exist in the retrofitted network ($w_{k's}^k = 0,\ z_{k's}^k = 0,\ a_{k's}^k = 0,\ x_{k'k''s}^k = 0,\ or\ b_k = 0$) these flows are forced equal to zero.

$$f_{k'st}^{Ik} - w_{k's}^k \mathbf{M} \leq 0 \qquad k \in HCT,\ k' \in R_k,\ s \in IS,\ t \in \mathbf{T} \quad \text{(B.26)}$$

$$f_{k'st}^{Ok} - z_{k's}^k \mathbf{M} \leq 0 \qquad k \in HCT,\ k' \in R_k,\ s \in IS,\ t \in \mathbf{T} \quad \text{(B.27)}$$

$$f_{k'st}^{EXk} - a_{k's}^k \mathbf{M} \leq 0 \qquad k \in HCT,\ k' \in R_k,\ s \in IS,\ t \in \mathbf{T} \quad \text{(B.28)}$$

$$f^{Bk}_{k'k''ss't} - x^{k}_{k'k''ss'}\mathrm{M} \leq 0 \quad k \in HCT,\ k' \in R_k,\ s, s' \in IS,\ t \in \mathrm{T} \tag{B.29}$$

$$f^{S}_{kt} - b_k\mathrm{M} \leq 0 \qquad k \in HCT,\ t \in \mathrm{T} \tag{B.30}$$

- Constraints in (B.31)-(B.35) ensure that if a match does not exist ($y_{kk's} = 0$) the piping segments connected with the corresponding exchanger do not exist either:

$$w^{k}_{k's} - y_{kk's} \leq 0 \qquad k \in HCT,\ k' \in R_k,\ s \in IS \tag{B.31}$$

$$z^{k}_{k's} - y_{kk's} \leq 0 \qquad k \in HCT,\ k' \in R_k,\ s \in IS \tag{B.32}$$

$$a^{k}_{k's} - y_{kk's} \leq 0 \qquad k \in HCT,\ k' \in R_k,\ s \in IS \tag{B.33}$$

$$x^{k}_{k'k''ss'} - y_{kk's} \leq 0 \quad k \in HCT, k' \in R_k, k'' \in S_{kk'}, s, s' \in IS \tag{B.34}$$

$$x^{k}_{k''k's's} - y_{kk's} \leq 0 \quad k \in HCT, k' \in R_k, k'' \in S_{kk'}, s, s' \in IS \tag{B.35}$$

- Constraint (B.36) prevents cyclic piping between two heat exchangers of the same process stream, while constraint (B.37) prevents the presence of multiple bypasses when the process stream exchanges heat only once.

$$x^{k}_{k'k''ss'} + x^{k}_{k''k's's} \leq 1 \qquad k \in HCT,\ k', k'' \in R_k \tag{B.36}$$

$$\sum_{k' \in R_k} \sum_{s \in IS} a^{k}_{k's} + b_k + (1 - \sum_{k' \in R_k} \sum_{s \in IS} y_{kk's})\mathrm{M} \leq 1 \qquad k \in HCT \tag{B.37}$$

- Constraints in (B.38)-(B.39) ensure that if a process stream contributes to a heat exchange (k,k',s) then the stream enters and exits the exchanger.

$$w^{k}_{k's} + \sum_{s' \in IS} \sum_{k'' \in S_{kk'}} x^{k}_{k'k''ss'} - y_{kk's} \geq 0 \qquad k \in HCT,\ k' \in R_k,\ s \in IS \tag{B.38}$$

$$z^{k}_{k's} + \sum_{s' \in IS} \sum_{k'' \in R_k,\ k' \in S_{kk''}} x^{k}_{k''k's's} - y_{kk's} \geq 0 \qquad k \in HCT,\ k' \in R_k,\ s \in IS \tag{B.39}$$

- Constraint (B.40) ensures that if a hot or cold stream exchanges heat with a cold or hot utility respectively, then it leaves the network only from that exchanger.

$$z^{k}_{k's} + y^{k}_{k''s'} \leq 0$$

$$k \in HP \cup CP,\ k' \in R^k \cap (HP\ or\ CP), k'' \in R_k \cap (HU\ or\ CU) \tag{B.40}$$

Synthesis of heat exchanger networks is driven by the minimization of the total annualized synthesis cost (operating and capital investment cost). In particular, the terms of the objective function are defined as follows:

- The operating cost of the hot and cold utility consumption, CHU_i, $i \in HU$ and $CCU_j, j \in CU$ respectively:

$$(CHU_i \sum_{j \in CP} \sum_{s \in IS} (\sum_t Q_{ijst})/\mathbf{T} + CCU_j \sum_{i \in HP} \sum_{s \in IS} (\sum_t Q_{ijst})/\mathbf{T})$$

- The cost of purchasing an exchanger includes the cost of the required area plus a standard cost NE of installation. Let the cost of purchasing area A is given by a function aA^b. Then the relative term in the objective function will be:

$$a(A_{ijs})^b + NEy_{ijs}$$

- Piping cost is assumed to correspond to a standard cost for each piping segment. Pressure drop considerations are not explicitly taken into account. However, relatively high piping costs drive the network towards simple piping layouts.

Therefore, the total annualized synthesis cost to be minimized will be:

$$OBJ = min\{(CHU_i \sum_{j \in CP} \sum_{s \in IS} (\sum_t Q_{ijs})/\mathbf{T} + CCU_j \sum_{i \in HP} \sum_{s \in IS} (\sum_t Q_{ijs})/\mathbf{T})$$

$$\sum_{(i,j,s)} \{aA_{ijs}{}^b + NEy_{ijs}\} \tag{B.41}$$

$$+[\mathbf{CP}][\sum_k b^k + \sum_{s \in IS} \sum_k \sum_{k' \in R_k} (w^k_{k',s} + z^k_{k',s} + 3 * y_{kk's} + \sum_{k'' \in S_{kk'}} \sum_{s' \in IS} x^k_{k'k''ss'}]\}$$

Constraints (B.4)-(B.40), along with the objective function in (B.41) define the mixed integer nonlinear programming (MINLP) model for the multiperiod synthesis of heat exchanger networks *without decomposition.*

It should be noted that restrictions on the network structure (e.g. no stream splitting requirements) and/or on undesired (forbidden) matches (due to layout restrictions) can be easily included

in the model. In this respect, the user has the flexibility of interacting with the model and simplify the solution procedure as well as the network structure.

Retrofit of heat exchanger networks is driven by the minimization of a total annualized retrofit cost. I.e. only structural modifications are penalized, when investment cost is concerned. In the retrofit problem, however, the existing equipment can be utilized. Existing heat exchanger units can be assigned to existing or new matches, the area of existing exchangers can be assigned to the location of different exchangers. Thus, the retrofit problem requires the introduction of the variables defined in Table B.4.

The match-exchanger assignments in the retrofit problem are modelled as follows:

- Equation (B.42) ensures that for a match in a subnetwork s either an existing unit will be assigned or a new one will be purchased. When a match (i,j) is not selected $(y_{ijs} = 0)$ then neither an existing unit is assigned to it $(d^n_{ijs} = 0)$ nor a new one is purchased for it $(n_{ijs} = 0)$.

$$\sum_{n \in X} d^n_{ijs} + n_{ijs} - y_{ijs} = 0 \qquad (i,j) \in PM^t \tag{B.42}$$

- Equation (B.43) defines the total existing area assigned to the location of an exchanger n. Constraints (B.44)-(B.45) define the total area NA_{ijs} of an exchanger that needs to be purchased for the match $(i,j)_s$. If $n_{ijs} = 1$ then eq. (B.44) gives a lower bound to the area to be purchased, which is minimized due to its cost in the objective function, while if $n_{ijs} = 0$ eq.(B.45) forces $NA_{ijs} = 0$ and eq.(B.44) is relaxed.

$$AEA_n = \sum_{l=1}^{X} (EA_l v_{nl}) \qquad n \in X; \tag{B.43}$$

$$NA_{ijs} + (1 - n_{ijs})UBND \geq A_{ijs} \qquad i \in HT, j \in R_i, s \in IS \tag{B.44}$$

$$NA_{ijs} - n_{ijs} UBND \leq 0 \qquad i \in HT, j \in R_i, s \in IS \tag{B.45}$$

Constraint (B.46) gives a lower bound to the additional area that needs to be purchased for exchanger n if this is assigned to match ijs (when $d^n_{ijs} = 1$), while if $d^n_{ijs} = 0$ it is relaxed.

$$AA_n + AEA_n + (1 - d^n_{ijs})UPBND \geq A_{ijs} \qquad n \in X;\ i \in HT, j \in R_i, s \in IS \tag{B.46}$$

- Equation (B.47) ensures that the area of an existing exchanger n will either be assigned to the location of the exchanger n or to the location of another existing exchanger or it will be

removed from the network.

$$\sum_{n=1}^{X} v_{nl} \leq 1 \qquad l \in X \tag{B.47}$$

- Equation (B.48) ensures that exchanger n is assigned to at most one match - heat exchanger or its area is assigned to the location of existing exchanger l or it is removed from the network per period of operation.

$$\sum_{(i,j)\in PM^t} d_{ijs}^n + \sum_{l\neq n} v_{ln} \leq 1 \quad n \in X \tag{B.48}$$

- Equation (B.49) gives an upper bound to the matches present in each period of operation with a maximum number of units MAXU, equal to the number of process streams and utilities plus one.

$$\sum_{s\in IS} \sum_{(i,j)\in PM^t} y_{ijs} \leq MAXU \tag{B.49}$$

The notation of the binaries d and n over subnetwork cover for the case when a match is present in several subnetworks and more than one exchanger must be assigned to it (existing or new).

The objective function of the retrofit problem involves:

- The operating cost of the hot and cold utility consumption, CHU_i, $i \in HU$ and $CCU_j, j \in CU$ respectively:

$$(CHU_i \mathbf{Q^H}_{ilt} + CCU_j \mathbf{Q^C}_{jlt})$$

- The cost of purchasing a new exchanger, which includes the cost of the required area plus a standard cost NE of installation. Let the cost of purchasing area A is given by a function aA^b. Then the relative term in the objective function will be:

$$a(NA_{ijs})^b + NEn_{ijs}$$

- The cost of purchasing additional area for an existing exchanger, which will be activated if the exchanger is assigned to a match. It includes a standard installation cost NEA and the cost of the required area:

$$aAA_n{}^b + NEAd_{ijs}^n$$

- The cost of reassigning an existing exchanger to a different match, or the same match in a different subnetwork, over the periods of operation is given by:

$$C_{ij}^{n} d_{ijs}^{n}$$

- Assigning the area of an existing exchanger to the location of another existing exchanger is penalized with a cost CAA_{ln}:

$$CAA_{ln} v_{ln}$$

- Making a new match is penalized with a cost CNM_{ijst}, to account for potential stream reallocation.

- It is assumed that repiping cost is independent of exchanger reassignments. The contribution of repiping cost to the objective function is considered to be that proposed by Yee and Grossmann (1991).

Therefore, the total cost of structural modifications including operating cost to be minimized will be:

$$\begin{aligned} OBJ = min\{\sum_{t} \sum_{i \in HU} \sum_{(i,s)} CHU_i(Q_{ijst}/\mathbf{T}) + \sum_{t} \sum_{j \in CU} \sum_{(j,s)} CCU_j(Q_{ijst}/\mathbf{T})\} + \\ min \sum_{(i,j,s)} \{\{aNA_{ijs}{}^{b} + NEn_{ijs} \\ + \sum_{n} \{aAA_{n}{}^{b} + (NEA + C_{ij}^{n}) d_{ijs}^{n} + \sum_{l \neq n} CAA_{ln} v_{ln}\} \\ + CNM_{ijs} \end{aligned} \tag{B.50}$$

$$+[\mathbf{CP}][w_j^{i,s} + \sum_{k' \in s_{kk'}} x_{j,k'}^{i,s,s} + \sum_{s' \in IS} x_{j,j}^{i,s,s'} + z_j^{i,s} + b^i]$$

$$+[\mathbf{CP}][w_i^{j,s} + \sum_{k' \in s_{kk'}} x_{i,k'}^{j,s,s} + \sum_{s' \in IS} x_{i,i}^{j,s,s'} + z_i^{j,s} + b^j]\}y_{ijs}\}$$

Constraints (B.4)-(B.40), (B.42)-(B.49) along with the objective function in eq.(B.50) define the mixed-integer nonlinear programming (MINLP) model for the multiperiod retrofit problem *without decomposition.*

When *one-to-many* unit-to-match relation is considered, the heat exchanger network hyperstructure (see Figure 2.6) is described by the variables of Tables B.5 and B.6.

The hyperstructure model then involves:

- Mass balance at the initial splitter of each stream over each period of operation:

$$\sum_{k \in XT} f_{k,t}^{s} + f_{s,t}^{exit} - \mathbf{F}_{s,t}^{IN} = 0 \qquad s \in HC, \quad t = 1, \ldots, N \tag{B.51}$$

- Mass balances at the mixer before each exchanger, for the hot and the cold side:

$$\sum_{i \in H} f_{i,t}^{k} + \sum_{l \in XT,\, l \neq k} f_{klt}^{h,BY} + \sum_{i \in HU} \sum_{j \in R_i} \frac{Q_{ijkt}}{\mathbf{T}_i^{IN} - \mathbf{T}_i^{OUT}} \; w_i^k - f_{k,t}^{h,TO} = 0 \qquad k \in XT, \;\; t = 1, \ldots, N \tag{B.52}$$

$$\sum_{j \in C} f_{j,t}^{k} + \sum_{l \in XT,\, l \neq k} f_{klt}^{c,BY} + \sum_{j \in CU} \sum_{i \in R_j} \frac{Q_{ijkt}}{\mathbf{T}_j^{OUT} - \mathbf{T}_j^{IN}} \; w_j^k - f_{k,t}^{c,TO} = 0 \qquad k \in XT, \;\; t = 1, \ldots, N \tag{B.53}$$

- Mass balances at the splitter prior to each heat exchanger, for the hot and the cold side, for each period of operation:

$$f_{k,t}^{h,TO} - f_{k,t}^{h,IN} - f_{k,t}^{h,EX} = 0 \qquad k \in XT, \;\; t = 1, \ldots, N \tag{B.54}$$

$$f_{k,t}^{c,TO} - f_{k,t}^{c,IN} - f_{k,t}^{c,EX} = 0 \qquad k \in XT, \;\; t = 1, \ldots, N \tag{B.55}$$

- Mass balances at the splitter following each heat exchanger, for the hot and the cold side, over each time period:

$$f^{h,TO} - \sum_{l \in XT,\, l \neq k} f_{lkt}^{h,BY} - f_{k,t}^{h,EXIT} = 0 \qquad k \in XT, \quad t = 1, \ldots, N \tag{B.56}$$

$$f^{c,TO} - \sum_{l \in XT,\, l \neq k} f_{lkt}^{c,BY} - f_{k,t}^{c,EXIT} = 0 \qquad k \in XT, \quad t = 1, \ldots, N \tag{B.57}$$

- Constraints (B.58)-(B.61) guarantee that each heat exchanger enters at most one hot stream or hot utility and one cold stream or cold utility, while constraint (B.62) determines the overall bypass flow for each process stream:

$$f_{s,t}^{k} - UPBND\, y_s^k \leq 0 \qquad k \in XT,\ \ s \in HC,\ \ t = 1, \ldots, N \tag{B.58}$$

$$\sum_{k \in XT} y_s^k \geq 1 \qquad s \in HC \tag{B.59}$$

$$\sum_{i \in H} y_i^k \leq 1 \qquad k \in XT \tag{B.60}$$

$$\sum_{j \in C} y_j^k \leq 1 \qquad k \in XT \tag{B.61}$$

$$f_{s,t}^{exit} - UPBND\, y_s^{exit} \leq 0 \qquad s \in HC,\ \ t = 1, \ldots, N \tag{B.62}$$

- Energy balances at the hot and the cold inlet of each heat exchanger for each period of operation:

$$f_{k,t}^{h,TO} t_{k,t}^{h,IN} = \sum_{i \in H} f_{i,t}^{k} \mathbf{T}_{i,t}^{IN} + \sum_{i \in HU} \sum_{j \in R_i} \frac{Q_{ijkt}}{\mathbf{T}_i^{IN} - \mathbf{T}_i^{OUT}}\ \mathbf{T}_i^{IN} w_i^k$$

$$+ \sum_{l \in XT,\ l \neq k} f_{klt}^{h,BY} t_{l,t}^{h,FOUT} = 0 \qquad k \in XT,\ \ t = 1, \ldots, N \tag{B.63}$$

$$f_{k,t}^{c,TO} t_{k,t}^{c,IN} = \sum_{j \in C} f_{j,t}^{k} \mathbf{T}_{j,t}^{IN} + \sum_{j \in CU} \sum_{i \in R_j} \frac{Q_{ijkt}}{\mathbf{T}_j^{OUT} - \mathbf{T}_j^{IN}}\ \mathbf{T}_j^{IN} w_j^k$$

$$+ \sum_{l \in XT,\ l \neq k} f_{klt}^{c,BY} t_{l,t}^{c,FOUT} = 0 \qquad k \in XT,\ \ t = 1, \ldots, N \tag{B.64}$$

- Energy balances at the hot and cold outlet mixer of each heat exchanger for each period of operation:

$$f_{k,t}^{h,IN} t_{k,t}^{h,OUT} + f_{k,t}^{h,EX} t_{k,t}^{h,IN} = f_{k,t}^{h,TO} t_{k,t}^{h,FOUT} \qquad k \in XT,\ \ t = 1, \ldots, N \tag{B.65}$$

$$f_{k,t}^{c,IN} t_{k,t}^{c,OUT} + f_{k,t}^{c,EX} t_{k,t}^{c,IN} = f_{k,t}^{c,TO} t_{k,t}^{c,FOUT} \qquad k \in XT,\ \ t = 1, \ldots, N \tag{B.66}$$

- Energy balances over each heat exchanger for each period of operation:

$$\sum_{(i,j)\in MA_k} Q_{ijkt} - f_{k,t}^{h,IN} dt_{k,t}^{h} = 0 \qquad k \in XT,\ \ t = 1,\ldots,N \tag{B.67}$$

$$\sum_{(i,j)\in MA_k} Q_{ijkt} - f_{k,t}^{c,IN} dt_{k,t}^{c} = 0 \qquad k \in XT,\ \ t = 1,\ldots,N \tag{B.68}$$

where the temperature differences for the hot and the cold stream are defined through equations (B.69) and (B.70):

$$dt_{k,t}^{h} = t_{k,t}^{h,IN} - t_{k,t}^{h,OUT} \qquad k \in XT,\ \ t = 1,\ldots,N \tag{B.69}$$

$$dt_{k,t}^{c} = t_{k,t}^{c,OUT} - t_{k,t}^{c,IN} \qquad k \in XT,\ \ t = 1,\ldots,N \tag{B.70}$$

Lower bounds on the temperature differences are given from constraints (B.71) and (B.72):

$$dt_{k,t}^{h} \geq \sum_{(i,j)\in MA_k,\, i\in H,\, j\in R_i} \frac{Q_{ijkt}}{\mathbf{F}_{it}^{IN}} + \sum_{i\in HU} DT_i w_i^k \qquad k \in XT,\ \ t = 1,\ldots,N \tag{B.71}$$

$$dt_{k,t}^{c} \geq \sum_{(i,j)\in MA_k,\, j\in C,\, i\in R_j} \frac{Q_{ijkt}}{\mathbf{F}_{jt}^{IN}} + \sum_{j\in CU} DT_j w_j^k \qquad k \in XT,\ \ t = 1,\ldots,N \tag{B.72}$$

- Exchanger design equations:

$$\sum_{i\in HCT} \sum_{i\in R_i} \frac{Q_{ijkt}}{U_{ijt}} - (AEA_k + AA_k) TD_{kt} \leq 0 \qquad k \in XT, t = 1,\ldots,N \tag{B.73}$$

where the logarithmic temperature difference is defined through equation (B.74):

$$TD_{kt} = \frac{(t_{k,t}^{h,IN} - t_{k,t}^{c,OUT}) - (t_{k,t}^{h,OUT} - t_{k,t}^{c,IN})}{\ln \frac{t_{k,t}^{h,IN} - t_{k,t}^{c,OUT}}{t_{k,t}^{h,OUT} - t_{k,t}^{c,IN}}} \qquad k \in XT,\ \ t = 1,\ldots,N \tag{B.74}$$

- Feasible heat exchange in each heat exchanger for each period of operation is guaranteed through feasibility constraints:

$$t_{k,t}^{h,OUT} - t_{k,t}^{c,IN} \geq \Delta T_{min} \qquad k \in XT,\ \ t = 1,\ldots,N \tag{B.75}$$

$$t_{k,t}^{h,IN} - t_{k,t}^{c,OUT} \geq \Delta T_{min} \qquad k \in XT,\ \ t = 1,\ldots,N \tag{B.76}$$

- Overall heat balances for each stream and each time period:

$$\mathbf{F}_{i,t}^{IN}\mathbf{T}_{it}^{OUT} = \sum_{k\in XT}(f_{k,t}^{h,EXIT}t_{k,t}^{h,FOUT}w_i^K) + f_{i,t}^{exit}\mathbf{T}_{i,t}^{IN} \quad i \in H,\ t = 1,\ldots,N \tag{B.77}$$

$$\mathbf{F}_{j,t}^{IN}\mathbf{T}_{jt}^{OUT} = \sum_{k\in XT}(f_{k,t}^{c,EXIT}t_{k,t}^{c,FOUT}w_j^K) + f_{j,t}^{exit}\mathbf{T}_{j,t}^{IN} \quad j \in C,\ t = 1,\ldots,N \tag{B.78}$$

In the synthesis case the heat exchangers are all new (to be purchased), while the set of exchangers in the retrofit case involves existing and new heat exchangers. In either case, match-exchanger assignment constraints are necessary.

- Constraints (B.79) and (B.80) guarantee that at most one hot and one cold stream is assigned to each heat exchanger, while constraint (B.81) ensures that if a stream enters an exchanger after its initial splitter no other stream will be assigned to that exchanger.

$$\sum_{i\in HT} w_i^k \leq 1 \qquad k \in XT \tag{B.79}$$

$$\sum_{j\in CT} w_j^k \leq 1 \qquad k \in XT \tag{B.80}$$

$$y_s^k - w_s^k \leq 0 \qquad s \in HCT,\ k \in XT \tag{B.81}$$

- The existence of piping segments between exchangers and between exchangers and the outlet of the network is determined through constraints (B.82)-(B.89):

$$x_s^{kl} - w_s^k \leq 0 \qquad s \in HCT,\ k,l \in XT \tag{B.82}$$

$$x_s^{kl} - w_s^l \leq 0 \qquad s \in HCT,\ k,l \in XT \tag{B.83}$$

$$z_{kl}^h - \sum_{i\in H} x_i^{kl} \leq 0 \qquad k,l \in XT \tag{B.84}$$

$$z_{kl}^c - \sum_{j\in C} x_j^{kl} \leq 0 \qquad k,l \in XT \tag{B.85}$$

$$f_{klt}^{h,BY} - UPBND\ z_{kl}^h \leq 0 \qquad k,l \in XT,\ t = 1,\ldots,N \tag{B.86}$$

$$f_{klt}^{c,BY} - UPBND\ z_{kl}^c \leq 0 \qquad k,l \in XT,\ t = 1,\ldots,N \tag{B.87}$$

$$f_{k,t}^{h,EXIT} - UPBND\ z_{k,exit}^h \leq 0 \qquad k \in XT, t = 1,\ldots,N \tag{B.88}$$

$$f_{k,t}^{c,EXIT} - UPBND\ z_{k,exit}^{c} \leq 0 \qquad k \in XT, t = 1, \ldots, N \tag{B.89}$$

Constraints (B.90) and (B.91) refer to the piping segments for the hot and cold bypasses in each exchanger and each time period.

$$f_{k,t}^{h,EX} - UPBND\ a_k^h \leq 0 \qquad k \in XT,\ t = 1, \ldots, N \tag{B.90}$$

$$f_{k,t}^{c,EX} - UPBND\ a_k^c \leq 0 \qquad k \in XT,\ t = 1, \ldots, N \tag{B.91}$$

The objective function involves:

- Operating cost, in terms of hot and cold utility consumption, co_i^{HU} and co_j^{CU} respectively:

$$co_i^{HU} Q_{ijkt} + co_j^{CU} Q_{ijkt}$$

- Cost of purchasing a new exchanger, co^{NE} and area cost co^{AA}:

$$co^{NE} \frac{\sum_{i \in HT} w_i^k + \sum_{j \in CT} w_j^k}{2} + co^{AA} AA_k^{0.6}$$

- Repiping cost, expressed through the binary variables declaring the existing and new piping segments.

- Cost of assigning the area of an existing exchanger to another existing exchanger:

$$CAA_{kl} v_{kl}$$

Therefore, the total retrofit cost to be minimized will be:

$$\begin{aligned} OBJ = min\{ & \sum_{t \in T} \sum_{k \in XT} \{ \sum_{i \in HU} \sum_{j \in R_i} (co_i^{HU} Q_{ijkt}) + \sum_{j \in CU} \sum_{i \in R_j} (co_j^{CU} Q_{ijkt}) \} \ + \\ & co^{NE} \sum_{k \in XU} \frac{\sum_{i \in HT} w_i^k + \sum_{j \in CT} w_j^k}{2} + co^{AA} \sum_{k \in XT} AA_k^{0.6} \ + \\ & co^{NP} \{ \sum_{(k,l) \in NP} (z_{kl}^h + z_{kl}^c) + \sum_{(k,out) \in NP} (z_{k,exit}^h + z_{k,exit}^c) \ + \\ & \sum_{s \in HCT} \sum_{k \in XT} y_k^s + \sum_{s \in HCT} y_s^{exit} \ + \sum_{k \in XT} (a_k^h + a_k^c) \ \} \ + \end{aligned} \tag{B.92}$$

$\mathbf{HT_{lt}}$	set of hot process streams and hot utilities present at or above temperature interval l at time period t, $l \in IT^t$, $t = 1, \ldots, N$
$\mathbf{CT_{lt}}$	set of cold process streams and cold utilities present at the temperature interval l at time period t
q_{ijlt}	heat flow from hot stream i to cold stream j, in temperature interval l at time period t, where $i \in HT_{lt}$ and $j \in CT_{lt}$
$\mathbf{Q^H}_{ilt}$	heat content of hot process stream or hot utility i, $i \in HT_{lt}$, at interval $l \in IT_t$ (this is variable for hot utilities)
$\mathbf{Q^C}_{jlt}$	heat content of cold process stream or cold utility j, $j \in CT_{lt}$ at interval $l \in IT_t$ of time period t (variable for cold utilities)
Q_{ijst}	total heat amount that hot stream i exchanges with cold stream j at subnetwork $s_t \in IS_t$ of time period t
R_{ilt}	residual heat flow from interval l, corresponding to hot stream $i \in HT_{lt}$

Table B.1: Notation of heat flow model.

$$\sum_{k,l \in X, l \neq k} (CAA_{kl} v_{kl}) \quad \}$$

Constraints (B.51) - (B.91) (and constraints (B.1)-(B.3) potentially) along with the objective function in eq. (B.92) define the mixed-integer nonlinear programming (MINLP) model for the multiperiod hyperstructure based on the superstructure proposed by Yee and Grossmann (1991). The formulation requires that the variables w_s^k, x_s^{kl}, z_{kl}^h, z_{kl}^c, $z_{k,exit}^h$, $z_{k,exit}^c$, y_k^{exit}, a_k^h, a_k^c, be declared as binary variables, whereas the variables v_{kl}, y_s^k will automatically take 0-1 values at the optimal point.

$y_{kk's}$	denotes the existence of a match between the streams k and k' in the "subnetwork" s
$w^k_{k's}$	denotes the existence of a piping segment between the initial splitter of the process stream $k \in HCT$ and the exchanger (k,k',s), where $k' \in R_k$
$z^k_{k's}$	denotes the existence of a piping segment between the outlet of the exchanger (k,k',s) and the final mixer of the process stream $k \in HCT$, where $k' \in R_k$
$a^k_{k's}$	denotes the existence of a bypass piping segment at the exchanger (k,k',s) (for the hot or the cold side, $a^h_{kk's}, a^c_{kk's}$ respectively)
$x^k_{k'k''ss'}$	denotes the existence of a piping segment for the bypass flow of process stream $k \in HCT$ from exchanger (k,k",s') to exchanger (k,k',s), where $k' \in R_k$ and $k'' \in S_{kk'}$
b_k	denotes the existence of an overall bypass for stream $k \in HCT$

Table B.2: Binary-structural Variables for Hyperstructure Model (one-to-one assignment).

Q_{ijst}	total heat amount that hot stream i exchanges with cold stream j at subnetwork $s \in IS^t$, in period t
$f_{k't}^{I,k,s}$	flow of stream $k \in HCT$ that goes from the initial splitter of the stream directly to the match (k,k'), where $k' \in R_k$ in subnetwork s and period t
$f_t^{s,k}$	flow of stream $k \in HCT$ that goes from the initial splitter of the stream directly to the final mixer of the stream, in period t
$f_{k't}^{E,k,s}$	flow of the stream $k \in HCT$ that goes through the exchanger of the match (k,k'), where $k' \in R_k$, in subnetwork s and period t
$f_{k't}^{T,k,s}$	flow of stream $k \in HCT$ that exits the mixer prior to the exchanger of the match (k,k'), in subnetwork s and period t, where $k' \in R_k$
$f_{k't}^{EX,k,s}$	flow of stream $k \in HCT$ that bypasses the exchanger of the match (k,k'), in the subnetwork s and in period t, where $k' \in R_k$
$f_{k',k''t}^{B,k,s,s'}$	bypass flow of stream $k \in HCT$ from the splitter after the heat exchanger (k,k'') in subnetwork s' to the mixer prior to exchanger (k,k') in subnetwork s, at period t
$f_{k't}^{O,k,s}$	flow of stream $k \in HCT$ that goes from the splitter after the exchanger of the match (k,k') in subnetwork s to the final mixer of the stream, in period t
$t_{k't}^{I,k,s}$	temperature of stream $k \in HCT$ before the exchanger corresponding to the match (k,k'), in subnetwork s and period t
$t_{k't}^{O,k,s}$	temperature of stream $k \in HCT$ after the exchanger corresponding to the match (k,k'), in subnetwork s and period t
$t_{k't}^{FO,k,s}]$	temperature of stream $k \in HCT$ after the mixer, which is considered after the exchanger of the match (k,k') in subnetwork s and period t
$DT1_{ijst}$	temperature difference between hot stream i and cold stream j at the inlet of the hot stream to the exchanger of the match (i,j), in subnetwork s and period t
$DT2_{ijst}$	temperature difference between hot stream i and cold stream j at the outlet of the hot stream to the exchanger of the match (i,j), in subnetwork s and period t
$LMTD_{ijst}$	log mean temperature difference between hot stream i and cold stream j at the exchanger of the match (i,j) in subnetwork s and period t
A_{ijs}	area required for the heat exchange between the hot stream i and the cold stream j, where $i \in HT$ and $j \in R_i$, in subnetwork s, which will be the final area of the corresponding exchanger
U_{ijt}	overall heat transfer coefficient of match (i,j) in period t
ΔT_{ijmax}^{st}	largest possible temperature drop through the exchanger of the match (i,j) in subnetwork s and period t, equal to $\mathbf{T^{O,}}^{i} - \mathbf{T}_t^{\mathbf{I},i}$

Table B.3: Continuous Variables and Parameters for Hyperstructure Model (one-to-one assignment).

Binary variables	
d_{ijs}^{n}	decision variable to denote the assignment of existing exchanger n to the match (i, j, s)
v_{ln}	decision variable to denote the assignment of the are of existing exchanger n to the location of existing exchanger l
n_{ijs}	decision variable to denote the purchase of a new exchanger unit for the match (i, j, s)
Continuous variables	
AA_n	Additional area to be purchased for existing exchanger n
AEA_n	Area (from existing exchangers) allocated to exchanger unit n
NA_{ijs}	Area of a new exchanger purchased for the match (i, j, s)

Table B.4: Additional Variables for Retrofit Model (one-to-one assignment).

Binary variables	
y_s^k	binary variable to denote that stream $s \in HC$ is split entering the network to exchanger $k \in XT$
y_s^{exit}	binary variable that denotes the existence of an overall bypass of stream $s \in HC$
z_{kl}^h	binary variable that denotes the existence of a piping segment between the hot side of exchanger $k \in XT$ and $l \in XT$
z_{kl}^c	binary variable that denotes the existence of a piping segment between the cold side of exchanger $k \in XT$ and $l \in XT$
$z_{k,exit}^h$	binary variable to denote the existence of a piping segment between the hot outlet of exchanger $k \in XT$ and the outlet of the network
$z_{k,exit}^c$	binary variable to denote the existence of a piping segment between the cold outlet of exchanger $k \in XT$ and the outlet of the network
a_k^h	binary variable to denote the existence of a piping segment for the hot side of exchanger $k \in XT$ that bypasses the exchanger
a_k^c	binary variable to denote the existence of a piping segment for the cold side of exchanger $k \in XT$ that bypasses the exchanger

Table B.5: Variables for Hyperstructure Model (one-to-many assignment).

Continuous variables	
$f_{s,t}^{k}$	flow of stream $s \in HC$ from the initial splitter of the stream to the inlet of exchanger $k \in XT$ at time period t
$f_{s,t}^{exit}$	flow of stream $s \in HC$ that goes from the initial splitter of the stream to the final mixer of the stream at the tth period of operation
$f_{klt}^{h,BY}$	bypass flow of the hot stream from the splitter after heat exchanger $l \in XT$ to the mixer before heat exchanger $k \in XT$ at time period t
$f_{klt}^{c,BY}$	bypass flow of the cold stream from the splitter after heat exchanger $l \in XT$ to the mixer before heat exchanger $k \in XT$ at time period t
$f_{k,t}^{h,TO}$	flow from the mixer before the hot inlet of exchanger $k \in XT$ to the splitter before the hot inlet of the exchanger, at time period t
$f_{k,t}^{c,TO}$	flow from the mixer before the cold inlet of exchanger $k \in XT$ to the splitter before the cold inlet of the exchanger, at time period t
$f_{k,t}^{h,IN}$	hot stream flow through exchanger $k \in XT$ at the tth period of operation
$f_{k,t}^{c,IN}$	cold stream flow through exchanger $k \in XT$ at the tth period of operation
$f_{k,t}^{h,EX}$	hot stream flow that bypasses exchanger $k \in XT$ at time period t
$f_{k,t}^{c,EX}$	cold stream flow that bypasses exchanger $k \in XT$ at time period t
$f_{k,t}^{h,EXIT}$	hot stream flow from the splitter after exchanger $k \in XT$ to the outlet of the network at period t
$f_{k,t}^{c,EXIT}$	cold stream flow from the splitter after exchanger $k \in XT$ to the outlet of the network at period t
$t_{k,t}^{h,IN}$	hot stream temperature at the inlet of exchanger $k \in XT$ at the tth period of operation
$t_{k,t}^{h,OUT}$	hot stream temperature at the outlet of exchanger $k \in XT$ at the tth period of operation
$dt_{k,t}^{h}$	hot stream temperature difference over exchanger $k \in XT$ at time period t
$t_{k,T}^{h,FOUT}$	hot stream temperature after the mixer at the outlet of exchanger $k \in XT$ at time period t
$t_{k,t}^{c,IN}$	cold stream temperature at the inlet of exchanger $k \in XT$ at the tth period of operation
$t_{k,t}^{c,OUT}$	cold stream temperature at the outlet of exchanger $k \in XT$ at the tth period of operation
$dt_{k,t}^{c}$	cold stream temperature difference over exchanger $k \in XT$ at time period t
$t_{k,T}^{c,FOUT}$	cold stream temperature after the mixer at the outlet of exchanger $k \in XT$ at time period t
DT_i	temperature drop of hot utility $i \in HU$
DT_j	temperature increase for cold utility $j \in CU$
TD_{kt}	logarithmic temperature difference at exchanger $k \in XT$ at the tth period of operation

Table B.6: Variables for Hyperstructure Model (one-to-many assignment).

Appendix C

HEN Synthesis for Flexibility

C.1 Synthesis Model for HEN Stage-wise Superstructure

Consider the HEN stage-wise superstructure of Figure 2.18, described by the following sets:

$$\mathbf{HP} = \{\mathrm{i}|\mathrm{i\ is\ a\ hot\ process\ stream}\}$$

$$\mathbf{CP} = \{\mathrm{j}|\mathrm{j\ is\ a\ cold\ process\ stream}\}$$

$$\mathbf{HU} = \{\mathrm{i}|\mathrm{i\ is\ a\ hot\ utility}\}$$

$$\mathbf{CU} = \{\mathrm{j}|\mathrm{j\ is\ a\ cold\ utility}\}$$

Representing by y_{ijs} the existence of an exchange match between i-hot stream, j-cold stream in s-stage, then the HEN synthesis problem may be formulated as follows (see the notation in Table C.1):

$$\text{s.t.} \qquad \min \sum_{i\in\mathbf{HU}} C_i^{HU} \sum_{js} q_{ijs} + \sum_{j\in\mathbf{CU}} C_j^{CU} \sum_{is} q_{ijs} + C^A \sum_{ijs} A_{ijs}^{0.6} \qquad \textbf{(HENS)}$$

(i) energy balances for each stream and each stage:

$$F_i(th_{i,s} - th_{i,s+1}) - \sum_{j\in\mathbf{CP}} q_{ijs} - \sum_{j'\in\mathbf{CU}} q_{ij's} = 0, \qquad i \in \mathbf{HP},\ s = 1,\ldots,S \qquad \text{(C.1)}$$

$$F_j(tc_{j,s} - tc_{j,s+1}) - \sum_{i\in\mathbf{HP}} q_{ijs} - \sum_{i'\in\mathbf{HU}} q_{i'js} = 0, \qquad j \in \mathbf{CP},\ s = 1,\ldots,S \qquad \text{(C.2)}$$

(ii) definition of inlet and outlet temperatures

$$T_i^{in} - th_{i,1} = 0 \qquad T_i^{out} - th_{i,S+1} = 0 \qquad i \in \mathbf{HP} \tag{C.3}$$

$$T_j^{in} - tc_{j,S+1} = 0 \qquad T_j^{out} - tc_{j,1} = 0 \qquad i \in \mathbf{HP} \tag{C.4}$$

(iii) interval feasibility constraints

$$th_{i,s+1} - th_{i,s} \leq 0,, \qquad i \in \mathbf{HP},\ s = 1, \ldots, S \tag{C.5}$$

$$tc_{j,s+1} - tc_{j,s} \leq 0,, \qquad j \in \mathbf{CP},\ s = 1, \ldots, S \tag{C.6}$$

(iv) match definition

$$q_{ijs} - y_{ijs}\mathbf{U} \leq 0 \qquad i \in \mathbf{HP} \cup \mathbf{HU},\ j \in \mathbf{CP} \cup \mathbf{CU},\ s = 1, \ldots, S \tag{C.7}$$

where $\mathbf{U}$ is a large positive number.

(v) constraints to define the exchanger area and feasible heat exchange for each match

$$dt1_{ijs} - th_{i,s} + tc_{i,s} = 0 \qquad i \in \mathbf{HP} \cup \mathbf{HU},\ j \in \mathbf{CP} \cup \mathbf{CU},\ s = 1, \ldots, S \tag{C.8}$$

$$dt2_{ijs} - th_{i,s+1} + tc_{j,s+1} = 0 \qquad i \in \mathbf{HP} \cup \mathbf{HU},\ j \in \mathbf{CP} \cup \mathbf{CU},\ s = 1, \ldots, S \tag{C.9}$$

$$q_{ijs} - U_{ij}A_{ijs}\left(\frac{2}{3}(dt1_{ijs}dt2_{ijs})^{0.5} + \frac{dt1_{ijs} + dt2_{ijs}}{6}\right) - (1 - y_{ijs})\mathbf{U} \leq 0 \tag{C.10}$$
$$i \in \mathbf{HP} \cup \mathbf{HU},\ j \in \mathbf{CP} \cup \mathbf{CU},\ s = 1, \ldots, S$$

$$-dt1_{ijs} + \Delta T_{min} - (1 - y_{ijs})\mathbf{U} \leq 0 \qquad i \in \mathbf{HP} \cup \mathbf{HU},\ j \in \mathbf{CP} \cup \mathbf{CU},\ s = 1, \ldots, S \tag{C.11}$$

$$-dt2_{ijs} + \Delta T_{min} - (1 - y_{ijs})\mathbf{U} \leq 0 \qquad i \in \mathbf{HP} \cup \mathbf{HU},\ j \in \mathbf{CP} \cup \mathbf{CU},\ s = 1, \ldots, S \tag{C.12}$$

(vi) variable limits

$$q_{ijs} \geq 0, \quad ,th_{is} \geq 0, \quad ,tc_{js} \geq 0 i \in \mathbf{HP} \cup \mathbf{HU},\ j \in \mathbf{CP} \cup \mathbf{CU},\ s = 1, \ldots, S \tag{C.13}$$

C.2 MINLP-based Algorithm for Flexible and Economically Optimal HENs

The synthesis of simultaneously optimal and flexible HENs involves (see Figure 2.19):

Step 0 : Define an initial vector of heat exchange matches, $\mathbf{y}^0$.

Step 1 : For the current heat exchange matches, $\mathbf{y}^m$, solve the Primal NLP problem to determine exchanger areas and heat loads, *at nominal operating conditions.*

If Primal is infeasible, go to Step 4.

Step 2 : For the current heat exchange matches, $\mathbf{y}^m$, identify all candidate sets of active constraints, employing the MILP formulation proposed by Pistikopoulos and Grossmann (1988) and including integer cuts, based on the above remarks.

For each candidate set check if this actually can be active *in the considered uncertainty space*, *i.e.* solve the corresponding Kuhn-Tucker system to determine the Lagrange multipliers of equality and inequality constraints, with variable uncertainty and design. If there is an uncertainty point within the uncertainty range and a design (exchange areas) that give a feasible solution to λ^k's and μ^k's, then J_A^k defines a χ^k-feasibility constraint.

Step 3 : Solve Solve an *augmented Primal* NLP problem to determine exchanger areas and heat loads, including the feasibility constraints ($\chi^k \leq 0$) and the explicit Kuhn-Tucker system for the determination of λ_j^k and μ_i^k for each possible set of active constraints.

- When inlet stream temperatures only are uncertain, then the vertices of the uncertainty space suffice for a valid evaluation of the χ-feasibility function.
- When stream flowrates or heat transfer coefficients are uncertain , then χ-functions are not necessarily monotonic. However, feasibility requirements can be approximated, when several points within the uncertainty space are employed to calculate $\chi^k \leq 0$.

If augmented Primal is feasible update Cost Upper bound. Construct the Lagrangian cut. Go to Step 5.

If augmented Primal is infeasible go to Step 4.

Step 4 : Solve a relaxed NLP subproblem, minimizing constraint violation. Construct a relaxed Lagrangian cut.

F_i	heat capacity flowrate of hot process stream i
T_i^{in}	inlet temperature of hot process stream i
T_i^{out}	outlet temperature of hot process stream i
F_j	heat capacity flowrate of cold process stream j
T_j^{in}	inlet temperature of cold process stream j
T_j^{out}	outlet temperature of cold process stream j
$th_{i,s}$	temperature of hot stream i at the inlet of stage s
$tc_{j,s}$	temperature of cold stream j at the outlet of stage s
$dt1_{ijs}$	temperature difference at the hot inlet of exchanger (i,j) at stage s
$dt2_{ijs}$	temperature difference at the hot outlet of exchanger (i,j) at stage s
U_{ij}	heat transfer coefficient for streams (i,j)
A_{ijS}	area of exchanger (i,j) at stage s

Table C.1: Continuous Variables and Parameters for HEN Stage-wise Superstructure Model

Step 5 : Solve the Master MILP subproblem to determine a new vector of HEN matches. Update Cost Lower bound.

If bounds converge, STOP. The optimal and flexible HEN is given by the current upper bound solution. Otherwise, go back to Step 1.

Appendix D

Disturbance Propagation and Disturbance Rejection in HENs

D.1 Disturbance Propagation Analysis

- **Network representation through structural matrices**

A heat exchanger network can, in general, be described by a set of differential and algebraic equations, of the form:

$$\dot{\mathbf{x}} = A\mathbf{x} + B\mathbf{u} + E_1\mathbf{g} + D_1\mathbf{d}$$

$$0 = C\mathbf{x} + F\mathbf{u} + E_2\mathbf{g} + D_2\mathbf{d}$$

where $\mathbf{x}$ is the vector of the state variables, $\mathbf{u}$ is the vector of manipulated variables, $\mathbf{g}$ is the vector of algebraic variables and $\mathbf{d}$ is the vector of disturbances. For the steady-state operation, which is considered at the design level, $\dot{\mathbf{x}} = 0$. In general, the entries of the matrices, $A_{n\times n}$, $B_{n\times m}$, $E_{1n\times r}$, $D_{1n\times p}$, $C_{s\times n}$, $F_{s\times m}$, $E_{2s\times r}$ and $D_{2s\times p}$ are nonlinear functions of the variable vector (x, u, g, d).

Based on such a representation, a structural matrix $\mathbf{M}$ is defined as the $(n+s)\times(n+r)$ matrix the entries of which are fixed to zero where the corresponding entries of the matrix $\left|\begin{array}{cc} A & E_1 \\ C & E_2 \end{array}\right|$ are zero or otherwise take arbitrary values (Georgiou and Floudas, 1989*b*).

$\mathbf{M}^*$ is the $(n+s)\times(n+r)$ structural matrix with: (i) its diagonal elements arbitrary (non-zero) entries and (ii) its non-diagonal elements equal to zero or non-zero at the same locations as the non-diagonal zero or non-zero elements of $\mathbf{M}$ respectively.

The structural matrix that remains after the elimination of the cth column of M^* is denoted as $\mathrm{M}^* \mid_c$.

Similarly, matrix **D** is defined as the structural matrix corresponding to $\left| \begin{array}{c} D_1 \\ D_2 \end{array} \right|$.

- **Generic Rank**

Generic rank of a structural matrix $\mathbf{M}_{n \times m}$ is the maximum rank that achieves the matrix as a function of its arbitrary (non-zero) elements.

The determination of the generic rank can be formulated as a linear programming problem by defining three types of variables (Georgiou and Floudas, 1989*a*):

v_i: Binary variable, corresponding to a row, denoting whether the row is active (when $v_i = 1$) or redundant (when $v_i = 0$).

w_j: Binary variable, corresponding to a column, denoting whether the column is active (when $w_j = 1$) or redundant (when $w_j = 0$).

y_{ij}: Binary variable, denoting (when $y_{ij} = 1$) that the variable of the jth column is an output variable of the ith row. y_{ij} is set to zero when the corresponding elements of M are zero.

The generic rank of matrix **M** is determined then by the following optimization problem (Georgiou and Floudas, 1989*a*):

$$\max_{i,j} \sum_{(i,j)} y_{ij}$$

$$\sum_{j=1,\ldots,m} y_{ij} - v_i = 0, \qquad i = 1, \ldots, n \tag{D.1}$$

$$\sum_{i=1,\ldots,n} y_{ij} - w_j \leq 0, \qquad i = 1, \ldots, m \tag{D.2}$$

$$\sum_{i=1,\ldots,n} v_i = GR \tag{D.3}$$

$$\sum_{j=1,\ldots,m} w_j = GR \tag{D.4}$$

In the above formulation, the coefficients of variables v_i, w_j and y_{ij} form a totally unimodular matrix, as proven by Georgiou and Floudas (1989*a*) and, thus, the variables can be relaxed to continuous, as they will have an integer value at the optimum solution. Hence, the problem can be solved as an LP.

- **Disturbability**

A controlled variable x is called disturbable from the input-disturbance d if there is a pathway connecting these variables in the bipartite representation of the system. Georgiou and Floudas (1989*c*) have proved that this is equivalent to the generic rank of $(\mathbf{M}^* \mid_{c=x}, \mathbf{D})$ being equal to the number of active rows of the system, *i.e.* the generic rank of $(\mathbf{M}^*, \mathbf{D})$.

Consider for example the network of Figure D.1. The inlet temperature of stream $H1$ is considered as disturbance, whereas the outlet temperature of stream $H2$ is the controlled variable. The augmented structural matrix of the network is illustrated in Table D.1 It must be noted, that the process stream exchangers are represented by two similar rows in the structural matrix, corresponding to the two differential equations for the outlet temperatures of the process streams. Manipulated variables, as utility loads, and constant inputs (for example the inlet temperatures of $H2, C1$) are not included.

The generic rank of matrix $(\mathbf{M}^*, \mathbf{D})$ is found equal to 5, whereas the generic rank of matrix $(\mathbf{M}^* \mid_{c=3}, \mathbf{D})$ is 5 as well. Thus in the existing network, the outlet temperature of $H2$ is disturbable from the input T^{in}_{H1}.

Consider then the retrofitted network of Figure D.2. The augmented structural matrix, $(\mathbf{M1}^*, \mathbf{D})$, is illustrated in Table D.2, where T^{out}_{H1} is not included since it can be controlled with the bypass at exchanger 1. The generic rank of $(\mathbf{M1}^*, \mathbf{D})$ equals 5, whereas the generic rank of $(\mathbf{M1}^* \mid_{c=3}, \mathbf{D})$ is equal to 4; this implies that T^{out}_{H2} is not disturbable from the input T^{in}_{H1}.

D.2 Generic Rank of a Variable Structural Matrix

For a certain vector of the structural binary variables, the generic rank of the variable structural matrix can be evaluated through the following maximization problem (see also Table 3.1):

$$\max_{ijs} GR \qquad \textbf{(GP)}$$

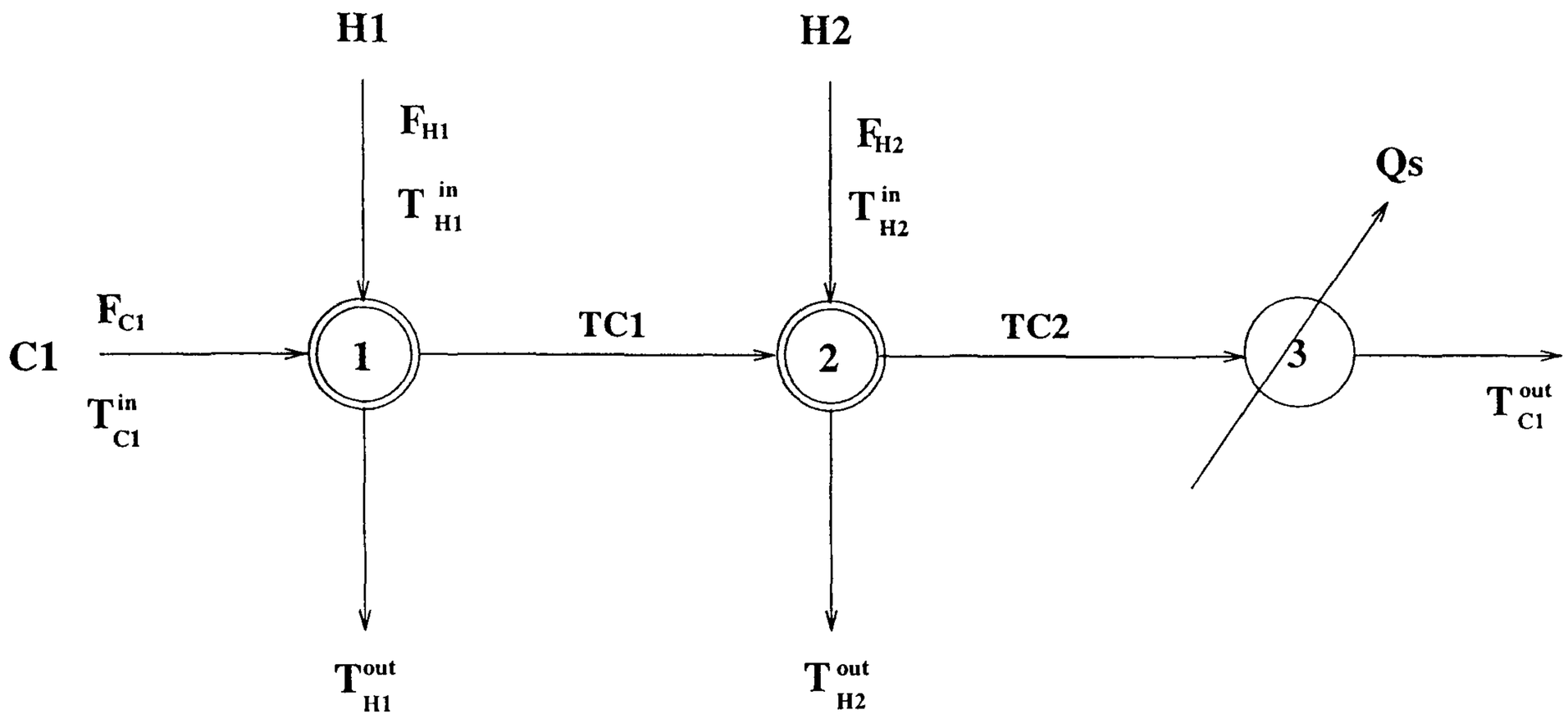

Figure D.1: Retrofitted network (flexibility considerations)

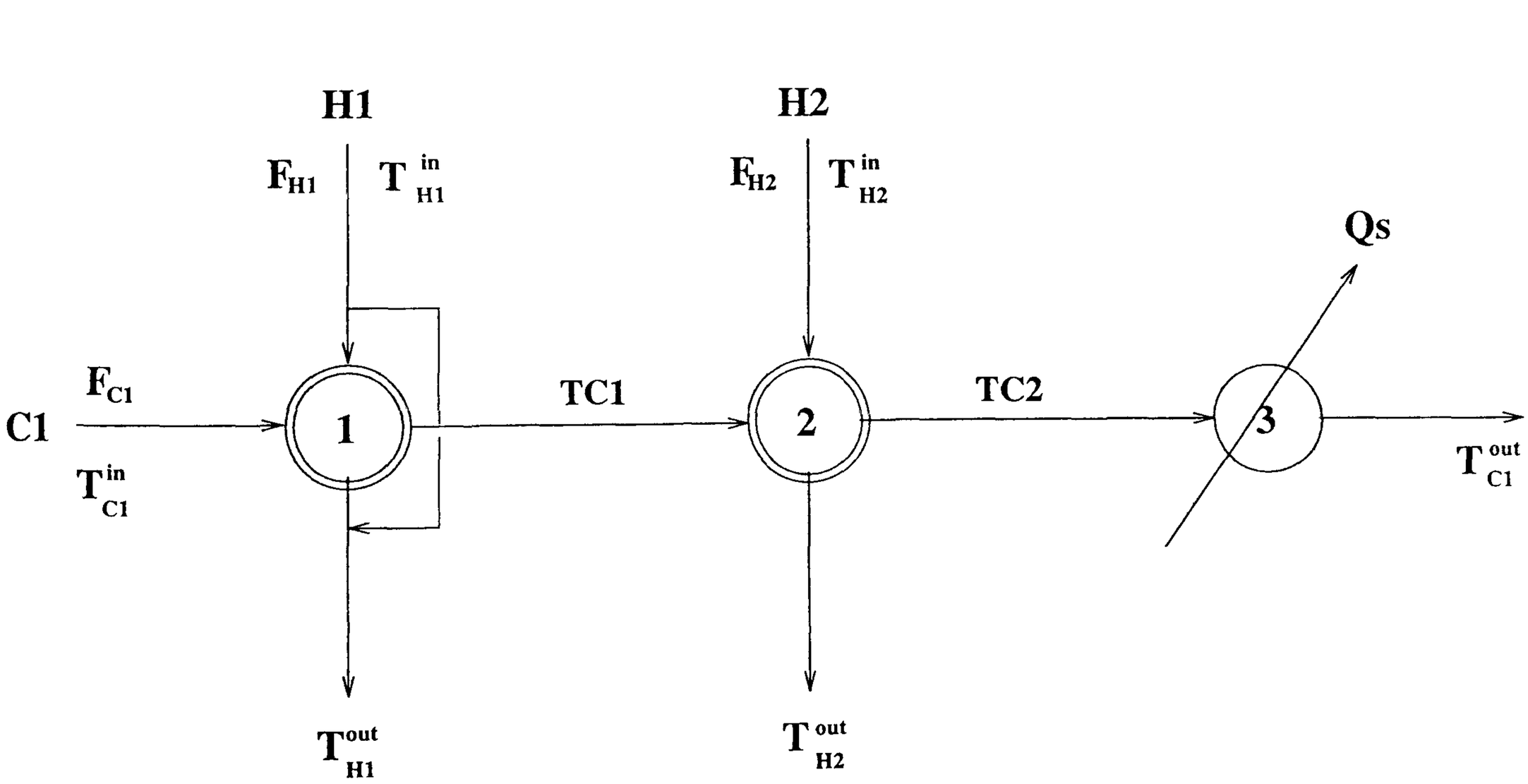

Figure D.2: Retrofitted network (for flexibility and Disturbance Rejection) for Example 1.

	T_{H1}^{out}	$TC1$	T_{H2}^{out}	$TC2$	T_{C1}^{out}	T_{H1}^{in}	
(ex.1)	×	×				×	v_1
	×	×				×	v_2
(ex.2)		×	×	×			v_3
		×	×	×			v_4
(ex.3)				×	×		v_5
	w_1	w_2	w_3	w_4	w_5	w_6	

Table D.1: Structural matrix for network of Figure B.1

	$TC1$	T_{H2}^{out}	$TC2$	T_{C1}^{out}	T_{H1}^{in}	
(ex.1)	×				×	v_1
	×				×	v_2
(ex.2)	×	×	×			v_3
	×	×	×			v_4
(ex.3)			×	×		v_5
	w_2'	w_3'	w_4'	w_5'	w_6'	

T_{H1}^{out} is not included to denote the existence of manipulated bypass at exchanger 1

Table D.2: Structural matrix for network of Figure B.2

s.t.

$$r_{ehae}^{hIijs} + \sum_{\substack{(j',s') \\ x^i_{j's'}=1}} r_{ehae}^{hFOij's'} + \underset{(if\ w^i_{js}=1)}{r_{ehae}^{Ii}} - p_{ij}^{ehae} = 0, \quad i \in HP,\ j \in R_i,\ s \in IS \tag{D.5}$$

$$r_{ecae}^{cIijs} + \sum_{\substack{(i',s') \\ x^j_{i's'}=1}} r_{ecae}^{cFOi'js'} + \underset{(if\ w^j_{is}=1)}{r_{ecae}^{Ij}} - p_{ij}^{ecae} = 0, \quad j \in CP,\ i \in R_j,\ s \in IS \tag{D.6}$$

$$\underset{(if\ a^i_{js}=1)}{r_{ehpe}^{hIijs}} + r_{ehpe}^{hOijs} + r_{ehpe}^{hFOijs} - p_{ijs}^{ehpe} = 0, \quad i \in HP,\ j \in R_i,\ s \in IS \tag{D.7}$$

$$\underset{(if\ a^j_{is}=1)}{r_{ecpe}^{cIijs}} + r_{ecpe}^{cOijs} + r_{ecpe}^{cFOijs} - p_{ijs}^{ecpe} = 0, \quad j \in CP,\ i \in R_j,\ s \in IS \tag{D.8}$$

$$r_{ehe}^{hOijs} + \underset{(if\ j \in CP)}{r_{ehe}^{cOijs}} + r_{ehe}^{hIijs} + \underset{(if\ j \in CP)}{r_{ehe}^{cIijs}} - p_{ijs}^{ehe} = 0, \quad i \in HP,\ j \in R_i,\ s \in IS \tag{D.9}$$

$$r_{ece}^{cOijs} + \underset{(if\ i \in HP)}{r_{ece}^{hOijs}} + r_{ece}^{cIijs} + \underset{(if\ i \in HP)}{r_{ece}^{hIijs}} - p_{ijs}^{ece} = 0, \quad j \in CP,\ i \in R_j,\ s \in IS \tag{D.10}$$

$$\sum_{j,z^i_{js}=1} r_{he}^{hFOijs} + r_{he}^{Oi} + \underset{(if\ b^i=1)}{r_{he}^{Ii}} - p_i^{he} = 0, \qquad i \in HP \tag{D.11}$$

$$\sum_{i,z^j_{is}=1} r_{ce}^{cFOijs} + r_{ce}^{Oj} + \underset{(if\ b^j=1)}{r_{ce}^{Ij}} - p_j^{ce} = 0, \qquad j \in CP \tag{D.12}$$

$$\sum_{j,w^i_{js}=1} r_{ehae}^{HIij} + \underset{(if b^i=1)}{r_{he}^{Ii}} - qT_i^I \le 0, \qquad i \in HP \tag{D.13}$$

$$\sum_{i,w^j_{is}=1} r_{ecae}^{CIij} + \underset{(if b^j=1)}{r_{ce}^{Ij}} - qT_j^I \le 0, \qquad j \in CP \tag{D.14}$$

$$r_{he}^{Oi} - qT_i^O \le 0, \qquad i \in HP \tag{D.15}$$

$$r_{ce}^{Oj} - qT_j^O \le 0, \qquad j \in CP \tag{D.16}$$

$$\underset{(if\ j \in CP)}{r_{ece}^{hIijs}} + r_{ehe}^{hIijs} + r_{ehae}^{hIijs} + \underset{(if\ a^i_{js}=1)}{r_{ehpe}^{hIijs}} - qt_{js}^{h,I,i} \le 0, \quad i \in HP,\ j \in R_i,\ s \in IS \tag{D.17}$$

$$r^{cIijs}_{ehe\ (if\ i\in HP)} + r^{cIijs}_{ece} + r^{cIijs}_{ecae} + r^{cIijs}_{ecpe\ (if\ a^j_{is}=1)} - qt^{c,I,j}_{is} \leq 0, \quad j \in CP,\ i \in R_j,\ s \in IS \tag{D.18}$$

$$r^{hOijs}_{ece\ (if\ j\in CP)} + r^{hOijs}_{ehe} + r^{hOijs}_{ehpe} - qt^{h,O,i}_{js} \leq 0, \quad i \in HP,\ j \in R_i,\ s \in IS \tag{D.19}$$

$$r^{cOijs}_{ehe\ (if\ i\in HP)} + r^{cOijs}_{ece} + r^{cOijs}_{ecpe} - qt^{c,O,j}_{is} \leq 0, \quad j \in CP,\ i \in R_j,\ s \in IS \tag{D.20}$$

$$\sum_{(j',s')\ x^i_{j'js's}=1} r^{hFOijs}_{ehaeij's'} + r^{hFOijs}_{ehpe} + r^{hFOijs}_{he\ (if\ z^i_{js}=1)} - qt^{h,FO,i}_{js} \leq 0, \quad i \in HP,\ j \in R_i,\ s \in IS \tag{D.21}$$

$$\sum_{(i',s')\ x^j_{i'is's}=1} r^{cFOijs}_{ehaei'js'} + r^{cFOijs}_{ehpe} + r^{cFOijs}_{ce\ (if\ z^j_{is}=1)} - qt^{c,FO,j}_{is} \leq 0, \quad j \in CP,\ i \in R_j,\ s \in IS \tag{D.22}$$

$$\sum_{i\in HP} p^{he}_i + \sum_{j\in CP} p^{ce}_j + \sum_{(i\in HP,j,s)\ y_{ijs}=1} (p^{ehe}_{ijs} + p^{ehae}_{ijs} + p^{ehpe}_{ijs}) \sum_{(i,j\in CP,s)\ y_{ijs}=1} (p^{ece}_{ijs} + p^{ecae}_{ijs} + p^{ecpe}_{ijs}) = GR \tag{D.23}$$

$$\sum_{i\in HP} (q\mathbf{T}^O_i + q\mathbf{T}^I_i) + \sum_{j\in CP} (q\mathbf{T}^O_j + q\mathbf{T}^I_j) + \sum_{(i\in HP,j,s)\ y_{ijs}=1} (qt^{h,O,i}_{js} + qt^{h,I,i}_{js} + qt^{h,FO,i}_{js}) \sum_{(i,j\in CP,s)\ y_{ijs}=1} (qt^{c,O,j}_{is} + qt^{c,I,j}_{is} + qt^{c,FO,j}_{is}) = GR \tag{D.24}$$

$$\sum_{(i\in HP,j\in R_i)} (r^{hIijs}_{ehae} + \sum_{(j',s')\ x^i_{j'ss'}=1} r^{hFOij's'}_{ehae} + r^{Ii}_{ehae\ (if\ w^i_{js}=1)} +$$

$$r^{hIijs}_{ehpe\ (if\ a^i_{js}=1)} + r^{hOijs}_{ehpe} + r^{hFOijs}_{ehpe} + r^{hOijs}_{ehe} + r^{cOijs}_{ehe\ (if\ j\in CP)} + r^{hIijs}_{ehe} + r^{cIijs}_{ehe\ (if\ j\in CP)}\ )$$

$$\sum_{(j\in CP, i\in R_j)} (r^{cIijs}_{ecae} + \sum_{(i',s')\ x^j_{i's's}=1} r^{cFOi'js'}_{ecae} + r^{Ij}_{ecae\ (if\ w^j_{is}=1)} +$$

$$r^{cIijs}_{ecpe\ (if\ a^j_{is}=1)} + r^{cOijs}_{ecpe} + r^{cFOijs}_{ecpe} + r^{cOijs}_{ece} + r^{hOijs}_{ece\ (if\ i\in HP)} + r^{cIijs}_{ece} + r^{hIijs}_{ece\ (if\ i\in HP)}\ )$$

$$\sum_{i\in HP}(\sum_{j,z^i_{js}=1} r^{hFOijs}_{he} + r^{Oi}_{he} + r^{Ii}_{he\ (if\ b^i=1)}\ )$$

$$\sum_{j\in CP}(\sum_{i,z^j_{is}=1} r^{cFOijs}_{ce} + r^{Oj}_{ce} + r^{Ij}_{ce\ (if\ b^j=1)}\ ) = GR \qquad \text{(D.25)}$$

D.3 On the equivalence of problems (PC′) and (PC″)

The multiperiod synthesis/retrofit model with the disturbance rejection criterion **(PC′)** can be written, in general as follows:

$$\begin{gathered}
\min_{(x,y)} f(x,y) \\
s.t. \quad h(x,y) = 0 \\
g(x,y) \le 0 \\
\mathbf{GR} = \max_{p,q,r} GR \le AR(y) - 1 \\
GR - \textstyle\sum_{ij} r_{ij} = 0 \\
\textstyle\sum_i r_{ij} - q_j \le 0 \\
\textstyle\sum_j r_{ij} - p_i = 0 \\
0 \le r_{ij} \le 1 \\
0 \le p_i \le 1 \\
0 \le q_j \le 1 \\
F(y,p,q,r) \le 0
\end{gathered} \qquad \textbf{(PC′)}$$

where x are the continuous variables, y the structural binary variables, p, q and r the variables of the structural matrix, f the cost objective function, h and g the equality and inequality

constraints of the hyperstructure model and F the constraints that connect the variable structural matrix to the structural variables (eq. (3.1)-(3.6)). When the binary structural variables are fixed, at the Primal subproblem, AR is constant calculated through eq. (3.9) and F become simple bounds to p, q and r variables; *i.e.* the Primal subproblem can be written:

$$\min_x f(x)$$

$$s.t. \quad h(x) = 0$$

$$g(x) \leq 0 \qquad \textbf{(PC' primal)}$$

$$\mathbf{GR} = \max_{p,q,r} GR \leq AR - 1$$
$$GR - \sum_{ij} r_{ij} = 0$$
$$\sum_i r_{ij} - q_j \leq 0$$
$$\sum_j r_{ij} - p_i = 0$$
$$0 \leq r_{ij} \leq 1$$
$$0 \leq p_i \leq 1$$
$$0 \leq q_j \leq 1$$
$$F'(p, q, r) \leq 0$$

Introducing the penalty parameter **M'** in the objective function to overcome the inner maximization of GR, the corresponding primal subproblem of **(PC″)** can be written:

$$\min_{x,u} (f(x) - \mathrm{M}'u)$$

$$s.t. \quad h(x) = 0$$

$$g(x) \leq 0 \qquad \textbf{(PC″ primal)}$$

$$GR \leq AR - 1$$
$$GR \geq u$$
$$GR - \sum_{ij} r_{ij} = 0$$
$$\sum_i r_{ij} - q_j \leq 0$$
$$\sum_j r_{ij} - p_i = 0$$
$$0 \leq r_{ij} \leq 1$$
$$0 \leq p_i \leq 1$$

$$0 \leq q_j \leq 1$$
$$F'(p,q,r) \leq 0$$

Suppose that $\bar{X} = (\bar{x}, \bar{r}, \bar{p}, \bar{q})$ is a local optimal solution of **P′ primal** and $(\mu', \lambda', \alpha' \quad, \xi', b', k', l', \gamma', c', \delta', d', \epsilon', e', t')$ the corresponding Lagrange multipliers of the above set of constraints. Thus, the Kuhn-Tucker optimality conditions (Bazaraa and Shetty, 1979) of problem (**PC″ primal**) are:

$$\nabla_x f(x) + \textstyle\sum_i \mu_i' \nabla_x h_i(x) + \sum_i \lambda_i' \nabla_x g_i(x) = 0$$
$$-\mathbf{M}' + \xi' = 0$$
$$\alpha' - \xi' + b' = 0 \qquad \textbf{(I)}$$

$$-b' + k' + l' - \gamma' + c' + t'\nabla_r F'(p,q,r) = 0$$
$$-k' - \epsilon' + e' + t'\nabla_q F'(p,q,r) = 0$$
$$-l' - \delta' + d' + t'\nabla_p F'(p,q,r) = 0$$

For $\bar{X}$ to be a local optimal solution of (**PC′ primal**) there must exist corresponding multipliers so that the Kuhn-Tucker conditions for (**PC′ primal**) *and* the inner maximization problem hold; *i.e.*:

for **PC′ primal**:

$$\nabla_x f(x) + \textstyle\sum_i \mu_i \nabla_x h_i(x) + \sum_i \lambda_i \nabla_x g_i(x) = 0 \qquad \textbf{(II)}$$

for the inner maximization:

$$1 + b = 0$$
$$-b + k + l - \gamma + c + t\nabla_r F'(p,q,r) = 0$$
$$-k - \epsilon + e + t\nabla_q F'(p,q,r) = 0$$
$$-l - \delta + d + t\nabla_p F'(p,q,r) = 0$$

where $(\mu, \lambda, \alpha, b, k, l, \gamma, c, \delta, d, \epsilon, e, t)$ are the corresponding multipliers of problem (**PC′ primal**).

If $\mathbf{M}' = \xi' = \alpha' - 1$ then $\bar{X}$ is a local minimum of **PC′ primal** (from **(II)**).

Now, if $\bar{X}$ is a local minimum of **PC′ primal** then conditions **(II)** hold. Define $\mathrm{M}' = \alpha' - 1 = \xi'$; then $\bar{X}$ is also a local minimum of **PC″ primal** (since **(I)** are satisfied).

Therefore, a critical value of M' can be found, so that the primal subproblems of (PC′) and (PC″) are equivalent. This can be achieved by solving first the inner maximization problem with fixed structure; then a critical value of u is found for constraint $GR \geq 0$ to be active. From the multiplier of that constraint in the (PC″) problem, a proper value of M' can be found for the optimization to continue and extract the information of the multipliers of the rest constraints in order to construct the Lagrangian cut.

Appendix E

Pairing Model for Control Structure Selection

Split fractions and utility loads are potential manipulating variables for the specified control objectives. Pairing binary variables are introduced to denote that a specified output is controlled through a split fraction or utility loads.

Let us denote:

$$\mathbf{CH} = \{i \in HP,\ \mathbf{T^O}_i \text{ is a control objective}\}$$

$$\mathbf{CC} = \{j \in CP,\ \mathbf{T^O}_j \text{ is a control objective}\}$$

$$\mathbf{DH} = \{i \in HP,\ \mathbf{T^I}_i \text{ is a disturbance input}\}$$

$$\mathbf{DC} = \{j \in CP,\ \mathbf{T^I}_j \text{ is a disturbance input}\}$$

Then the pairing variables of Table E.1 are defined.

For each control objective one manipulating input must be selected:

$$\sum_{i'js \in PM} (m_{hi}^{hI,i'js} + m_{hi}^{hE,i'js} + m_{hi}^{hO,i'js} + \sum_{j',s'} m_{hi}^{hB,i'j'js's}) +$$

$$\sum_{i'js \in PM} (m_{hi}^{cI,i'js} + m_{hi}^{cE,i'js} + m_{hi}^{cO,i'js} + \sum_{i'',s'} m_{hi}^{cB,i''i'js's}) + \qquad \text{(E.1)}$$

$$\sum_{i' \in HP} m_{hi}^{hS,i'} + \sum_{j \in CP} m_{hi}^{cS,j} + \sum_{j \in \mathbf{CU},s} m_{hi}^{Uijs} = 1; \qquad i \in \mathbf{CH}$$

$$\sum_{ij's \in PM} (m_{cj}^{hI,ij's} + m_{cj}^{hE,ij's} + m_{cj}^{hO,ij's} + \sum_{j'',s'} m_{cj}^{hB,ij''j's's}) +$$

$$\sum_{ij's\in PM}(m_{cj}^{cI,ij's}+m_{cj}^{cE,ij's}+m_{cj}^{cO,ij's}+\sum_{i',s'}m_{cj}^{cB,i'ij's's})+ \tag{E.2}$$

$$\sum_{i\in HP}m_{cj}^{hS,i}+\sum_{j'\in CP}m_{cj}^{cS,j'}+\sum_{i\in \mathbf{HU},s}m_{cj}^{Uijs}=1; \qquad j\in \mathbf{CC}$$

For a splitter to be manipulating the corresponding flows must exist. The same holds for a utility exchanger. Moreover, each manipulating variable can not be selected to control more than one output:

$$m_{hi}^{Uijs}-y_{ijs}\leq 0; \qquad i\in \mathbf{HP},\ j\in \mathbf{CU},\ s\in \mathbf{IS} \tag{E.3}$$

$$m_{cj}^{Uijs}-y_{ijs}\leq 0; \qquad j\in \mathbf{CP},\ i\in \mathbf{HU},\ s\in \mathbf{IS} \tag{E.4}$$

$$\sum_{i'\in CH}m_{hi'}^{hI,ijs}+\sum_{j'\in CC}m_{cj'}^{hI,ijs}\leq w_{js}^{hi} \qquad (i,j,s)\in \mathbf{PM} \tag{E.5}$$

$$\sum_{i'\in CH}m_{hi'}^{hS,i}+\sum_{j'\in CC}m_{cj'}^{hS,i}\leq b^{hi} \qquad i\in \mathbf{HP} \tag{E.6}$$

$$\sum_{i'\in CH}m_{hi'}^{hE,ijs}+\sum_{j'\in CC}m_{cj'}^{hE,ijs}\leq a_{js}^{hi} \qquad (i,j,s)\in \mathbf{PM} \tag{E.7}$$

$$\sum_{i'\in CH}m_{hi'}^{hO,ijs}+\sum_{j'\in CC}m_{cj'}^{hO,ijs}\leq z_{js}^{hi} \qquad (i,j,s)\in \mathbf{PM} \tag{E.8}$$

$$\sum_{i'\in CH}m_{hi'}^{hB,ij''js's}+\sum_{j'\in CC}m_{cj'}^{hB,ij''js's}\leq x_{j''js's}^{hb,i} \qquad (i,j,s)\in \mathbf{PM},\ j''\in S_{ijs}^{h} \tag{E.9}$$

$$\sum_{i'\in CH}m_{hi'}^{cI,ijs}+\sum_{j'\in CC}m_{cj'}^{cI,ijs}\leq w_{is}^{cj} \qquad (i,j,s)\in \mathbf{PM} \tag{E.10}$$

$$\sum_{i'\in CH}m_{hi'}^{cS,j}+\sum_{j'\in CC}m_{cj'}^{cS,j}\leq b^{cj} \qquad j\in \mathbf{CP} \tag{E.11}$$

$$\sum_{i'\in CH}m_{hi'}^{cE,ijs}+\sum_{j'\in CC}m_{cj'}^{cE,ijs}\leq a_{is}^{cj} \qquad (i,j,s)\in \mathbf{PM} \tag{E.12}$$

$$\sum_{i'\in CH}m_{hi'}^{cO,ijs}+\sum_{j'\in CC}m_{cj'}^{cO,ijs}\leq z_{is}^{cj} \qquad (i,j,s)\in \mathbf{PM} \tag{E.13}$$

$$\sum_{i'\in CH}m_{hi'}^{cB,i''ijs's}+\sum_{j'\in CC}m_{cj'}^{cB,i''ijs's}\leq x_{i''is's}^{cb,j} \qquad (i,j,s)\in \mathbf{PM},\ i''\in S_{ijs}^{c} \tag{E.14}$$

A feasible control scheme requires that for each splitter $n-1$ split fractions can be independently manipulating, when n are the outlet flows of the splitter. Thus:

$$\sum_{i'\in CH}(m_{hi'}^{hS,i}+\sum_{j\in R_i,s}m_{hi'}^{hI,ijs})+\sum_{j'\in CC}(m_{cj'}^{hS,i}+\sum_{j\in R_i,s}m_{cj'}^{hI,ijs})\leq$$

$$\sum_{j \in R_i, s} w_{js}^{hi} + b^{hi} - 1 \qquad i \in \mathbf{HP} \tag{E.15}$$

$$\sum_{i' \in CH} (m_{hi'}^{cS,j} + \sum_{i \in R_j, s} m_{hi'}^{cI,ijs}) + \sum_{j' \in CC} (m_{cj'}^{cS,j} + \sum_{i \in R_j, s} m_{cj'}^{cI,ijs}) \leq$$

$$\sum_{i \in R_j, s} w_{is}^{cj} + b^{cj} - 1 \qquad j \in \mathbf{CP} \tag{E.16}$$

$$\sum_{i' \in CH} (m_{hi'}^{hO,ijs} + \sum_{j'' \in S_{ij}, s'} m_{hi'}^{hB,ij''js's}) + \sum_{j' \in CC} (m_{cj'}^{hO,ijs} + \sum_{j'' \in S_{ij}, s} m_{cj'}^{hB,ij''js's}) \leq$$

$$\sum_{j'' \in S_{ij}, s'} x_{j''js's}^{hi} + z_{js}^{hi} - y_{ijs} \qquad i \in \mathbf{HP},\ j \in R_i,\ s \in \mathbf{IS} \tag{E.17}$$

$$\sum_{i' \in CH} (m_{hi'}^{cO,ijs} + \sum_{i'' \in S_{ij}, s'} m_{hi'}^{cB,i''ijs's}) + \sum_{j' \in CC} (m_{cj'}^{cO,ijs} + \sum_{i'' \in S_{ij}, s} m_{cj'}^{cB,i''ijs's}) \leq$$

$$\sum_{i'' \in S_{ij}, s'} x_{i''is's}^{cj} + z_{is}^{cj} - y_{ijs} \qquad j \in \mathbf{CP},\ i \in R_j,\ s \in \mathbf{IS} \tag{E.18}$$

The above constraints (E.1-E.18) are included explicitly within the HEN Synthesis and/or Retrofit model when control pairing is considered. These are pure integer constraints which are all included in the MILP Master subproblem, increasing thus its size in terms of number of integer variables and constraints.

$m_{hi'}^{hI,ijs}$	pairing variable to denote that $\mathbf{T^O}_{i'}$ is controlled through the split fraction $f_{js}^{hI,i}/\mathbf{F}^i$ at the initial splitter of $i \in \mathbf{HP}$
$m_{cj'}^{hI,ijs}$	pairing variable to denote that $\mathbf{T^O}_{j'}$ is controlled through the split fraction $f_{js}^{hI,i}/\mathbf{F}^i$ at the initial splitter of $i \in \mathbf{HP}$
$m_{hi'}^{hS,i}$	pairing variable to denote that $\mathbf{T^O}_{i'}$ is controlled through the split fraction $f^{hS,i}/\mathbf{F}^i$ at the initial splitter of $i \in \mathbf{HP}$
$m_{cj'}^{hS,i}$	pairing variable to denote that $\mathbf{T^O}_{j'}$ is controlled through the split fraction $f^{hS,i}/\mathbf{F}^i$ at the initial splitter of $i \in \mathbf{HP}$
$m_{hi'}^{hE,ijs}$	pairing variable to denote that $\mathbf{T^O}_{i'}$ is controlled through the split fraction $f_{js}^{hEX,i}/f_{js}^{hTO,i}$ at the splitter prior to exchanger (ijs)
$m_{cj'}^{hE,ijs}$	pairing variable to denote that $\mathbf{T^O}_{j'}$ is controlled through the split fraction $f_{js}^{hEX,i}/f_{js}^{hTO,i}$ at the splitter prior to exchanger (ijs)
$m_{hi'}^{hO,ijs}$	pairing variable to denote that $\mathbf{T^O}_{i'}$ is controlled through the split fraction $f_{js}^{hO,i}/f_{js}^{hTO,i}$ at the splitter after exchanger (ijs)
$m_{cj'}^{hO,ijs}$	pairing variable to denote that $\mathbf{T^O}_{j'}$ is controlled through the split fraction $f_{js}^{hO,i}/f_{js}^{hTO,i}$ at the splitter after exchanger (ijs)
$m_{hi'}^{hB,ij''js's}$	pairing variable to denote that $\mathbf{T^O}_{i'}$ is controlled through the split fraction $f_{j''js's}^{hB,i}/f_{js}^{hTO,i}$ at the splitter after exchanger (ijs)
$m_{cj'}^{hB,ij''js's}$	pairing variable to denote that $\mathbf{T^O}_{j'}$ is controlled through the split fraction $f_{j''js's}^{hB,i}/f_{js}^{hTO,i}$ at the splitter after exchanger (ijs)
$m_{hi'}^{cI,ijs}$	pairing variable to denote that $\mathbf{T^O}_{i'}$ is controlled through the split fraction $f_{is}^{cI,j}/\mathbf{F}^j$ at the initial splitter of $j \in \mathbf{CP}$
$m_{cj'}^{cI,ijs}$	pairing variable to denote that $\mathbf{T^O}_{j'}$ is controlled through the split fraction $f_{is}^{cI,j}/\mathbf{F}^j$ at the initial splitter of $j \in \mathbf{CP}$
$m_{hi'}^{cS,j}$	pairing variable to denote that $\mathbf{T^O}_{i'}$ is controlled through the split fraction $f^{cS,j}/\mathbf{F}^j$ at the initial splitter of $j \in \mathbf{CP}$
$m_{cj'}^{cS,j}$	pairing variable to denote that $\mathbf{T^O}_{j'}$ is controlled through the split fraction $f^{cS,j}/\mathbf{F}^j$ at the initial splitter of $j \in \mathbf{CP}$
$m_{hi'}^{cE,ijs}$	pairing variable to denote that $\mathbf{T^O}_{i'}$ is controlled through the split fraction $f_{is}^{cEX,j}/f_{is}^{cTO,j}$ at the splitter prior to exchanger (ijs)
$m_{cj'}^{cE,ijs}$	pairing variable to denote that $\mathbf{T^O}_{j'}$ is controlled through the split fraction $f_{is}^{cEX,j}/f_{is}^{cTO,j}$ at the splitter prior to exchanger (ijs)
$m_{hi'}^{cO,ijs}$	pairing variable to denote that $\mathbf{T^O}_{i'}$ is controlled through the split fraction $f_{is}^{cO,j}/f_{is}^{cTO,j}$ at the splitter after exchanger (ijs)
$m_{cj'}^{cO,ijs}$	pairing variable to denote that $\mathbf{T^O}_{j'}$ is controlled through the split fraction $f_{is}^{cO,j}/f_{is}^{cTO,j}$ at the splitter after exchanger (ijs)
$m_{hi'}^{cB,i''ijs's}$	pairing variable to denote that $\mathbf{T^O}_{i'}$ is controlled through the split fraction $f_{i''is's}^{cB,j}/f_{is}^{cTO,j}$ at the splitter after exchanger (ijs)
$m_{cj'}^{cB,i''ijs's}$	pairing variable to denote that $\mathbf{T^O}_{j'}$ is controlled through the split fraction $f_{i''is's}^{cB,j}/f_{is}^{cTO,j}$ at the splitter after exchanger (ijs)
m_{hi}^{Uijs}	pairing variable to denote that $\mathbf{T^O}_i$ is controlled through the utility load in exchanger (ijs), where $j \in \mathbf{CU}$. It must be noted that, since a utility exchanger can be placed only at the outlet of a stream, they can be manipulated to control only the outlets of the corresponding streams.
m_{cj}^{Uijs}	pairing variable to denote that $\mathbf{T^O}_j$ is controlled through the utility load in exchanger (ijs), where $i \in \mathbf{HU}$.

ariables for Pairing Model.

Appendix F

Time Responses and Gains in HEN Hyperstructure

F.1 Dead Times and Time Responses in Network Hyperstructure

F.1.1 Dead Times

In the examples of this work, the response time of a controlled output with respect to a disturbance or manipulating input is considered due to the piping layout and the heat exchangers of the network. Splitters and mixers are assumed to be void of dead times.

In this work, the **heat exchanger** is modelled with two characteristic time delays, τ_h and τ_c, for the hot and the cold side respectively. The approximation proposed by Thal-Larsen is used:

$$\tau_h = \frac{\frac{H_h}{f_h^E} + \frac{h_c}{F_c^E}}{2} \qquad \tau_c = \frac{\frac{H_h}{f_h^E} + \frac{h_c}{F_c^E}}{8}$$

where H_h and H_c are the thermal hold-ups of the hot and cold side of the exchanger respectively. These are assumed constant in this work. This assumption can be relaxed, providing a well-defined relation of the thermal hold-up of a heat exchanger as a function of the flows and the type of the streams that participate, which can be explicitly included within the synthesis model.

The **pipe** also is assumed to be characterized by a constant thermal hold-up, H_p. Then the time delay is considered relative to the stream flow through the pipe:

$$\tau = \frac{f}{H_p}$$

Again, when the pipe hold-up can be evaluated analytically as a function of the flow and the type of the stream, the corresponding relations can be explicitly included within the synthesis model.

Input	$\mathbf{T^I}_i$	$\mathbf{T^I}_j$	$f^{hI,i}_{js}/\mathbf{F}^i$	$f^{hS,i}/\mathbf{F}^i$	$f^{hEX,i}_{js}/f^{hTO,i}_{js}$	$f^{hO,i}_{js}/f^{hTO,i}_{js}$	
Time response	$td^{hD,i}_{hi'}$	$td^{cD,j}_{hi'}$	$td^{hI,ijs}_{hi'}$	$td^{hS,i}_{hi'}$	$td^{hE,ijs}_{hi'}$	$td^{hO,ijs}_{hi'}$	
Input	$f^{hB,i}_{j''js's}/f^{hTO,i}_{js}$	$f^{cI,j}_{is}/\mathbf{F}^j$	$f^{cS,j}/\mathbf{F}^j$	$f^{cEX,j}_{is}/f^{cTO,j}_{is}$	$f^{cO,j}_{is}/f^{cTO,j}_{is}$	$f^{cB,j}_{i''is's}/f^{cTO,j}_{is}$	(ijs) $j \in \mathbf{CU}$
Time response	$td^{hB,ij''js's}_{hi'}$	$td^{cI,ijs}_{hi'}$	$td^{cS,j}_{hi'}$	$td^{cE,ijs}_{hi'}$	$td^{cO,ijs}_{hi'}$	$td^{cB,i''ijs's}_{hi'}$	$td^{Uijs}_{hi'}$

Table F.1: Shortest time responses of $\mathbf{T^O}_{i'}$ to network inputs.

In general, the time delays due to the heat exchangers and pipes can be described by any well defined model, *e.g.* lumped parameter model.

F.1.2 Time Responses

The variables of Tables F.1 and F.2 are introduced to denote the fastest time response of a controlled output to a manipulating and/or disturbance input.

The pairing criteria, based on the time responses of disturbances and manipulating inputs (time effective control), that are explicitly included within the synthesis model are the following:

- $\forall i' \in \mathbf{CH},\ i_d \in \mathbf{DH}$

$$td^{hI,ijs}_{hi'} - td^{hD,i_d}_{hi'} - (1 - m^{hI,ijs}_{hi'})\mathbf{M} + \alpha \leq 0; \quad (ijs) \in \mathbf{PM} \tag{F.1}$$

$$td^{hS,i}_{hi'} - td^{hD,i_d}_{hi'} - (1 - m^{hS,i}_{hi'})\mathbf{M} + \alpha \leq 0; \quad i \in \mathbf{HP} \tag{F.2}$$

$$td^{hE,ijs}_{hi'} - td^{hD,i_d}_{hi'} - (1 - m^{hE,ijs}_{hi'})\mathbf{M} + \alpha \leq 0; \quad (ijs) \in \mathbf{PM} \tag{F.3}$$

$$td^{hO,ijs}_{hi'} - td^{hD,i_d}_{hi'} - (1 - m^{hO,ijs}_{hi'})\mathbf{M} + \alpha \leq 0; \quad (ijs) \in \mathbf{PM} \tag{F.4}$$

$$td^{hB,ij''js's}_{hi'} - td^{hD,i_d}_{hi'} - (1 - m^{hB,ij''js's}_{hi'})\mathbf{M} + \alpha \leq 0; \quad (ijs) \in \mathbf{PM},\ j'' \in S_{ijs} \tag{F.5}$$

$$td^{cI,ijs}_{hi'} - td^{hD,i_d}_{hi'} - (1 - m^{cI,ijs}_{hi'})\mathbf{M} + \alpha \leq 0; \quad (ijs) \in \mathbf{PM} \tag{F.6}$$

$$td^{cS,j}_{hi'} - td^{hD,i_d}_{hi'} - (1 - m^{cS,j}_{hi'})\mathbf{M} \leq 0; \quad j \in \mathbf{CP} \tag{F.7}$$

$$td^{cE,ijs}_{hi'} - td^{hD,i_d}_{hi'} - (1 - m^{cE,ijs}_{hi'})\mathbf{M} + \alpha \leq 0; \quad (ijs) \in \mathbf{PM} \tag{F.8}$$

Input	$\mathbf{T^I}_i$	$\mathbf{T^I}_j$	$f^{hI,i}_{js}/\mathbf{F}^i$	$f^{hS,i}/\mathbf{F}^i$	$f^{hEX,i}_{js}/f^{hTO,i}_{js}$	$f^{hO,i}_{js}/f^{hTO,i}_{js}$	
Time response	$td^{hD,i}_{cj'}$	$td^{cD,j}_{cj'}$	$td^{hI,ijs}_{cj'}$	$td^{hS,i}_{cj'}$	$td^{hE,ijs}_{cj'}$	$td^{hO,ijs}_{cj'}$	
Input	$f^{hB,i}_{j''js's}/f^{hTO,i}_{js}$	$f^{cI,j}_{is}/\mathbf{F}^j$	$f^{cS,j}/\mathbf{F}^j$	$f^{cEX,j}_{is}/f^{cTO,j}_{is}$	$f^{cO,j}_{is}/f^{cTO,j}_{is}$	$f^{cB,j}_{i''is's}/f^{cTO,j}_{is}$	(ijs) $i \in \mathbf{HU}$
Time response	$td^{hB,ij''js's}_{cj'}$	$td^{cI,ijs}_{cj'}$	$td^{cS,j}_{cj'}$	$td^{cE,ijs}_{cj'}$	$td^{cO,ijs}_{cj'}$	$td^{cB,i''ijs's}_{hi'}$	$td^{Uijs}_{cj'}$

Table F.2: Shortest time responses of $\mathbf{T^O}_{j'}$ to network inputs.

$$td^{cO,ijs}_{hi'} - td^{hD,i_d}_{hi'} - (1 - m^{cO,ijs}_{hi'})\mathbf{M} + \alpha \leq 0; \quad (ijs) \in \mathbf{PM} \tag{F.9}$$

$$td^{cB,i''ijs's}_{hi'} - td^{hD,i_d}_{hi'} - (1 - m^{cB,i''ijs's}_{hi'})\mathbf{M} + \alpha \leq 0; \quad (ijs) \in \mathbf{PM},\ i'' \in S_{ijs} \tag{F.10}$$

$$td^{U,ijs}_{hi'} - td^{hD,i_d}_{hi'} - (1 - m^{U,ijs}_{hi'})\mathbf{M} + \alpha \leq 0; \quad (ijs) \in \mathbf{PM},\ j \in \mathbf{CU} \tag{F.11}$$

- $\forall i' \in \mathbf{CH},\ j_d \in \mathbf{DC}$

$$td^{hI,ijs}_{hi'} - td^{cD,j_d}_{hi'} - (1 - m^{hI,ijs}_{hi'})\mathbf{M} + \alpha \leq 0; \quad (ijs) \in \mathbf{PM} \tag{F.12}$$

$$td^{hS,i}_{hi'} - td^{cD,j_d}_{hi'} - (1 - m^{hS,i}_{hi'})\mathbf{M} + \alpha \leq 0; \quad i \in \mathbf{HP} \tag{F.13}$$

$$td^{hE,ijs}_{hi'} - td^{cD,j_d}_{hi'} - (1 - m^{hE,ijs}_{hi'})\mathbf{M} + \alpha \leq 0; \quad (ijs) \in \mathbf{PM} \tag{F.14}$$

$$td^{hO,ijs}_{hi'} - td^{cD,j_d}_{hi'} - (1 - m^{hO,ijs}_{hi'})\mathbf{M} + \alpha \leq 0; \quad (ijs) \in \mathbf{PM} \tag{F.15}$$

$$td^{hB,ij''js's}_{hi'} - td^{cD,j_d}_{hi'} - (1 - m^{hB,ij''js's}_{hi'})\mathbf{M} + \alpha \leq 0; \quad (ijs) \in \mathbf{PM},\ j'' \in S_{ijs} \tag{F.16}$$

$$td^{cI,ijs}_{hi'} - td^{cD,j_d}_{hi'} - (1 - m^{cI,ijs}_{hi'})\mathbf{M} + \alpha \leq 0; \quad (ijs) \in \mathbf{PM} \tag{F.17}$$

$$td^{cS,j}_{hi'} - td^{cD,j_d}_{hi'} - (1 - m^{cS,j}_{hi'})\mathbf{M} \leq 0; \quad j \in \mathbf{CP} \tag{F.18}$$

$$td^{cE,ijs}_{hi'} - td^{cD,j_d}_{hi'} - (1 - m^{cE,ijs}_{hi'})\mathbf{M} + \alpha \leq 0; \quad (ijs) \in \mathbf{PM} \tag{F.19}$$

$$td^{cO,ijs}_{hi'} - td^{cD,j_d}_{hi'} - (1 - m^{cO,ijs}_{hi'})\mathbf{M} + \alpha \leq 0; \quad (ijs) \in \mathbf{PM} \tag{F.20}$$

$$td^{cB,i''ijs's}_{hi'} - td^{cD,j_d}_{hi'} - (1 - m^{cB,i''ijs's}_{hi'})\mathbf{M} + \alpha \leq 0; \quad (ijs) \in \mathbf{PM},\ i'' \in S_{ijs} \tag{F.21}$$

$$td^{U,ijs}_{hi'} - td^{cD,j_d}_{hi'} - (1 - m^{U,ijs}_{hi'})\mathbf{M} + \alpha \leq 0; \quad (ijs) \in \mathbf{PM},\ j \in \mathbf{CU} \tag{F.22}$$

- $\forall j' \in \mathbf{CC},\ i_d \in \mathbf{DH}$

$$td^{hI,ijs}_{cj'} - td^{hD,i_d}_{cj'} - (1 - m^{hI,ijs}_{cj'})\mathbf{M} + \alpha \leq 0; \quad (ijs) \in \mathbf{PM} \tag{F.23}$$

$$td^{hS,i}_{cj'} - td^{hD,i_d}_{cj'} - (1 - m^{hS,i}_{cj'})\mathbf{M} \leq 0; \quad i \in \mathbf{HP} \tag{F.24}$$

$$td^{hE,ijs}_{cj'} - td^{hD,i_d}_{cj'} - (1 - m^{hE,ijs}_{cj'})\mathbf{M} + \alpha \leq 0; \quad (ijs) \in \mathbf{PM} \tag{F.25}$$

$$td^{hO,ijs}_{cj'} - td^{hD,i_d}_{cj'} - (1 - m^{hO,ijs}_{cj'})\mathbf{M} + \alpha \leq 0; \quad (ijs) \in \mathbf{PM} \tag{F.26}$$

$$td^{hB,ij''js's}_{cj'} - td^{hD,i_d}_{cj'} - (1 - m^{hB,ij''js's}_{cj'})\mathbf{M} + \alpha \leq 0; \quad (ijs) \in \mathbf{PM},\ j'' \in S_{ijs} \tag{F.27}$$

$$td^{cI,ijs}_{cj'} - td^{hD,i_d}_{cj'} - (1 - m^{cI,ijs}_{cj'})\mathbf{M} + \alpha \leq 0; \quad (ijs) \in \mathbf{PM} \tag{F.28}$$

$$td^{cS,j}_{cj'} - td^{hD,i_d}_{cj'} - (1 - m^{cS,j}_{cj'})\mathbf{M} \leq 0; \quad j \in \mathbf{CP} \tag{F.29}$$

$$td^{cE,ijs}_{cj'} - td^{hD,i_d}_{cj'} - (1 - m^{cE,ijs}_{cj'})\mathbf{M} + \alpha \leq 0; \quad (ijs) \in \mathbf{PM} \tag{F.30}$$

$$td^{cO,ijs}_{cj'} - td^{hD,i_d}_{cj'} - (1 - m^{cO,ijs}_{cj'})\mathbf{M} + \alpha \leq 0; \quad (ijs) \in \mathbf{PM} \tag{F.31}$$

$$td^{cB,i''ijs's}_{cj'} - td^{hD,i_d}_{cj'} - (1 - m^{cB,i''ijs's}_{cj'})\mathbf{M} + \alpha \leq 0; \quad (ijs) \in \mathbf{PM},\ i'' \in S_{ijs} \tag{F.32}$$

$$td^{U,ijs}_{cj'} - td^{hD,i_d}_{cj'} - (1 - m^{U,ijs}_{cj'})\mathbf{M} + \alpha \leq 0; \quad (ijs) \in \mathbf{PM},\ i \in \mathbf{HU} \tag{F.33}$$

- $\forall j' \in \mathbf{CC},\ j_d \in \mathbf{DC}$

$$td^{hI,ijs}_{cj'} - td^{cD,j_d}_{cj'} - (1 - m^{hI,ijs}_{cj'})\mathbf{M} + \alpha \leq 0; \quad (ijs) \in \mathbf{PM} \tag{F.34}$$

$$td^{hS,i}_{cj'} - td^{cD,j_d}_{cj'} - (1 - m^{hS,i}_{cj'})\mathbf{M} \leq 0; \quad i \in \mathbf{HP} \tag{F.35}$$

$$td^{hE,ijs}_{cj'} - td^{cD,j_d}_{cj'} - (1 - m^{hE,ijs}_{cj'})\mathbf{M} + \alpha \leq 0; \quad (ijs) \in \mathbf{PM} \tag{F.36}$$

$$td^{hO,ijs}_{cj'} - td^{cD,j_d}_{cj'} - (1 - m^{hO,ijs}_{cj'})\mathbf{M} + \alpha \leq 0; \quad (ijs) \in \mathbf{PM} \tag{F.37}$$

$$td^{hB,ij''js's}_{cj'} - td^{cD,j_d}_{cj'} - (1 - m^{hB,ij''js's}_{cj'})\mathbf{M} + \alpha \leq 0; \quad (ijs) \in \mathbf{PM},\ j'' \in S_{ijs} \tag{F.38}$$

$$td^{cI,ijs}_{cj'} - td^{cD,j_d}_{cj'} - (1 - m^{cI,ijs}_{cj'})\mathbf{M} + \alpha \leq 0; \quad (ijs) \in \mathbf{PM} \tag{F.39}$$

$$td^{cS,j}_{cj'} - td^{cD,j_d}_{cj'} - (1 - m^{cS,j}_{cj'})\mathbf{M} \leq 0; \quad j \in \mathbf{CP} \tag{F.40}$$

$$td^{cE,ijs}_{cj'} - td^{cD,j_d}_{cj'} - (1 - m^{cE,ijs}_{cj'})\mathbf{M} + \alpha \leq 0; \quad (ijs) \in \mathbf{PM} \tag{F.41}$$

$$td^{cO,ijs}_{cj'} - td^{cD,j_d}_{cj'} - (1 - m^{cO,ijs}_{cj'})\mathbf{M} + \alpha \leq 0; \quad (ijs) \in \mathbf{PM} \tag{F.42}$$

$$td^{cB,i''ijs's}_{cj'} - td^{cD,j_d}_{cj'} - (1 - m^{cB,i''ijs's}_{cj'})\mathbf{M} + \alpha \leq 0; \quad (ijs) \in \mathbf{PM},\ i'' \in S_{ijs} \tag{F.43}$$

$$td^{U,ijs}_{cj'} - td^{cD,j_d}_{cj'} - (1 - m^{U,ijs}_{cj'})\mathbf{M} + \alpha \leq 0; \quad (ijs) \in \mathbf{PM},\ i \in \mathbf{HU} \tag{F.44}$$

The above criteria are activated as constraints in the synthesis model when a pair is selected in the control scheme. α is a positive variable which is maximized (*e.g.* through a negative sign in the objective function to be minimized) so that the difference in the time responses to the manipulating variables and the disturbance inputs to be as large as possible. This difference becomes the selection basis for network structures and control schemes with the same cost.

Similarly, the criteria of dynamic decoupling are developed and included within the Synthesis

or Retrofit model.

F.2 Fastest Response as an LP Shortest Path Problem

Consider a directed graph ($V = \{i,\ i$ vertex$\}, V(i) = \{j,\ j$ vertex such as ij is an arc in the graph$\}$). Then if c_ij is the length of each arc, the shortest path from a vertex 1 to a vertex m is defined from the following optimization problem (Garfinkel and Nemhauser, 1972):

$$\min \sum_{i \in V} \sum_{j \in V(i)} c_{ij} x_{ij}$$

s.t

$$\sum_{j \in V(1)} x_{ij} = 1$$

$$\sum_{j \in V(i)} x_{ij} - \sum_{j \in V'(i)} x_{ji} = 0, \quad \text{where } V'(i) = \{j,\ j \text{ vertex such as ji is an arc in the graph}\})$$

$$\sum_{j \in V(m)} x_{mj} - \sum_{j \in V'(m)} x_{jm} = -1$$

The variables x_{ij} are discrete variables to denote the presence of the arc (ij) in the shortest path. However, *due to the total unimodularity* of the above formulation, these can be relaxed to *continuous*.

To formulate the shortest path problem in terms of time delays in the network hyperstructure of Figure 3.13, the following *continuous* variables must be introduced (the piping segments that start from the initial splitter of a stream can only be present in the path that starts from this vertex; the rest hyperstructure elements, however, must be taken into account when several network vertices are considered):

$ki_{k''}^{kls}$	variable to denote the existence of the piping segment between the initial splitter of the process stream $k \in HCT$ and the exchanger (kls), where $l \in R_k$, in the shortest path from the initial splitter of stream k to the final mixer of stream k''
ks^{k}	variable to denote the existence of the piping segment that corresponds to the overall bypass of stream k, in the shortest path from its initial splitter to the final mixer of the stream
$kb_{k''}^{in(k),(k'l''l's''s')}$	variable to denote the presence of the bypass pipe $(k'l''l's''s')$ in the shortest path from the initial splitter of stream k to the outlet of stream k''
$kb_{k''}^{pe(kls),(k'l''l's''s')}$	variable to denote the presence of the bypass pipe $(k'l''l's''s')$ in the shortest path from the splitter prior to exchanger (kls) to the outlet of stream k''
$kb_{k''}^{ae(kls),(k'l''l's''s')}$	variable to denote the presence of the bypass pipe $(k'l''l's''s')$ in the shortest path from the splitter after exchanger (kls) to the outlet of stream k''
$kb_{k''}^{e(kls),(k'l''l's''s')}$	variable to denote the presence of the bypass pipe $(k'l''l's''s')$ in the shortest path from the utility side of the utility exchanger (kls) to the outlet of stream k''
$ke1_{k''}^{in(k),(k'l's')}$	variable to denote the presence of the pipe (hot or cold side) entering the exchanger $(k'l's')$ in the shortest path from the initial splitter of stream k to the outlet of stream k''
$ke1_{k''}^{pe(kls),(k'l's')}$	variable to denote the presence of the pipe (hot or cold side) entering the exchanger $(k'l's')$ in the shortest path from the splitter prior to exchanger (kls) to the outlet of stream k''
$ke1_{k''}^{ae(kls),(k'l's')}$	variable to denote the presence of the pipe (hot or cold side) entering the exchanger $(k'l's')$ in the shortest path from the splitter after exchanger (kls) to the outlet of stream k''
$ke1_{k''}^{e(kls),(k'l's')}$	variable to denote the presence of the pipe (hot or cold side) entering the exchanger $(k'l's')$ in the shortest path from the utility side of the utility exchanger (kls) to the outlet of stream k''

$ke2_{k''}^{in(k),(k'l's')}$	variable to denote the presence of the pipe (hot or cold side) leaving the exchanger $(k'l's')$ in the shortest path from the initial splitter of stream k to the outlet of stream k''
$ke2_{k''}^{pe(kls),(k'l's')}$	variable to denote the presence of the pipe (hot or cold side) leaving the exchanger $(k'l's')$ in the shortest path from the splitter prior to exchanger (kls) to the outlet of stream k''
$ke2_{k''}^{ae(kls),(k'l's')}$	variable to denote the presence of the pipe (hot or cold side) leaving the exchanger $(k'l's')$ in the shortest path from the splitter after exchanger (kls) to the outlet of stream k''
$ke2_{k''}^{e(kls),(k'l's')}$	variable to denote the presence of the pipe (hot or cold side) leaving the exchanger $(k'l's')$ in the shortest path from the utility side of the utility exchanger (kls) to the outlet of stream k''
$kex_{k''}^{in(k),(k'l's')}$	variable to denote the presence of the pipe (hot or cold side) bypassing the exchanger $(k'l's')$ in the shortest path from the initial splitter of stream k to the outlet of stream k''
$kex_{k''}^{pe(kls),(k'l's')}$	variable to denote the presence of the pipe (hot or cold side) bypassing the exchanger $(k'l's')$ in the shortest path from the splitter prior to exchanger (kls) to the outlet of stream k''
$kex_{k''}^{ae(kls),(k'l's')}$	variable to denote the presence of the pipe (hot or cold side) bypassing the exchanger $(k'l's')$ in the shortest path from the splitter after exchanger (kls) to the outlet of stream k''
$kex_{k''}^{e(kls),(k'l's')}$	variable to denote the presence of the pipe (hot or cold side) bypassing the exchanger $(k'l's')$ in the shortest path from the utility side of the utility exchanger (kls) to the outlet of stream k''
$kea_{k''}^{in(k),(k'l's')}$	variable to denote the presence of the exchanger $(k'l's')$ (inlet of hot or cold side) in the shortest path from the initial splitter of stream k to the outlet of stream k''
$kea_{k''}^{pe(kls),(k'l's')}$	variable to denote the presence of the exchanger $(k'l's')$ (inlet of hot or cold side) in the shortest path from the splitter prior to exchanger (kls) to the outlet of stream k''
$kea_{k''}^{ae(kls),(k'l's')}$	variable to denote the presence of the exchanger $(k'l's')$ (inlet of hot or cold side) in the shortest path from the splitter after exchanger (kls) to the outlet of stream k''
$kea_{k''}^{e(kls),(k'l's')}$	variable to denote the presence of the exchanger $(k'l's')$ (inlet of hot or cold side) in the shortest path from the utility side of the utility exchanger (kls) to the outlet of stream k''

$keb_{k''}^{in(k),(k'l's')}$	variable to denote the presence of the exchanger $(k'l's')$ (outlet of hot or cold side) in the shortest path from the initial splitter of stream k to the outlet of stream k''
$keb_{k''}^{pe(kls),(k'l's')}$	variable to denote the presence of the exchanger $(k'l's')$ (outlet of hot or cold side) in the shortest path from the splitter prior to exchanger (kls) to the outlet of stream k''
$keb_{k''}^{ae(kls),(k'l's')}$	variable to denote the presence of the exchanger $(k'l's')$ (outlet of hot or cold side) in the shortest path from the splitter after exchanger (kls) to the outlet of stream k''
$keb_{k''}^{e(kls),(k'l's')}$	variable to denote the presence of the exchanger $(k'l's')$ (outlet of hot or cold side) in the shortest path from the utility side of the utility exchanger (kls) to the outlet of stream k''
$ko_{k'}^{in(k),(k'l's')}$	variable to denote the presence of the pipe (hot or cold) out of exchanger $(k'l's')$ to the final mixer of stream k' in the shortest path from the initial splitter of stream k to the outlet of stream k'
$ko_{k'}^{pe(kls),(k'l's')}$	variable to denote the presence of the pipe (hot or cold) out of exchanger $(k'l's')$ to the final mixer of stream k' in the shortest path from the splitter prior to exchanger (kls) to the outlet of stream k'
$ko_{k'}^{ae(kls),(k'l's')}$	variable to denote the presence of the pipe (hot or cold) out of exchanger $(k'l's')$ to the final mixer of stream k' in the shortest path from the splitter after exchanger (kls) to the outlet of stream k'
$ko_{k'}^{e(kls),(k'l's')}$	variable to denote the presence of the pipe (hot or cold) out of exchanger $(k'l's')$ to the final mixer of stream k' in the shortest path from the utility side of the utility exchanger (kls) to the outlet of stream k'

The LP-shortest path problem is solved in each GBD iteration considering as initial vertices the inlets of the disturbances and the current manipulating inputs and as final vertices the outlet of the control objectives. Each arc in the hyperstructure is associated with a time delay - "cost", which is estimated based on the stream flows that are determined from optimizing the cost of the current structure.

For the fastest response of the outlet temperature of cold stream j to the disturbance inlet temperature of hot stream i, the corresponding LP is as follows:

$$\min td_{cj}^{hi}$$

$$td_{cj}^{hi} = \sum_{\substack{j' \in R_i, s \\ wh_{j's}^{i} = 1}} (\tau hi_j^{ij's})(khi_j^{ij's}) +$$

$$\sum_{\substack{(i'j') \in PM, s \\ y_{i'j's} = 1}} \{(\tau he1^{i'j's})(khe1_j^{in(i),(i'j's)}) + (\tau he2^{i'j's})(khe2_j^{in(i),(i'j's)}) +$$

$$(\tau he^{i'j's}/2)(khea_j^{in(i),(i'j's)} + kheb_j^{in(i),(i'j's)}) +$$

$$(\tau ce1^{i'j's})(kce1_j^{in(i),(i'j's)}) + (\tau ce2^{i'j's})(kce2_j^{in(i),(i'j's)}) + \qquad \text{(F.45)}$$

$$(\tau ce^{i'j's}/2)(kcea_j^{in(i),(i'j's)} + kceb_j^{in(i),(i'j's)})\} +$$

$$\sum_{\substack{(i'j') \in PM, s \\ a_{j's}^{i'} = 1}} (\tau hx^{i'j's})(khx_j^{in(i),(i'j's)}) + \sum_{\substack{(i'j') \in PM, s \\ a_{i's}^{j'} = 1}} (\tau cx^{i'j's})(kcx_j^{in(i),(i'j's)}) +$$

$$\sum_{\substack{i' \in HP, j' \in R'_i \\ j'' \in S_{i'j'}, s, s' \\ x_{j''j's's}^{i'} = 1}} (\tau hb^{i'j''j's's})(khb_j^{in(i),(i'j''j's's)}) + \sum_{\substack{j' \in CP, i' \in R'_j \\ i'' \in S_{i'j'}, s, s' \\ x_{i''i's's}^{j'} = 1}} (\tau cb^{i''i'j's's})(kcb_j^{in(i),(i''i'j's's)}) +$$

$$\sum_{\substack{i' \in R_j \\ z_{i'}^{j} = 1}} (\tau o^{i'js})(kco_j^{in(i),(i'js)}) +$$

$$\sum_{\substack{j' \in R_i, s \\ wh_{j's}^{i} = 1}} khi_j^{ij's} = 1 \qquad \text{(F.46)}$$

$$(khi_j^{ij's}) \quad if i = i' \quad wh_{j's}^{i} = 1 \quad + \sum_{\substack{j'' \in S_{i'j'}, s, s' \\ x_{j'j''ss'}^{i'} = 1}} khb_j^{in(i),(i'j'j''ss')} - khe1_j^{in(i),(i'j's)} = 0$$

$$i' \in HP,\ j' \in R_{i'},\ s \in IS,\ y_{i'j's} = 1 \qquad \text{(F.47)}$$

$$\sum_{\substack{i'' \in S_{i'j'}, s, s' \\ x^{j'}_{i'i''ss'} = 1}} kcb_j^{in(i),(i'i''j'ss')}) - kce1_j^{in(i),(i'j's)} = 0 \qquad i' \in HP,\ j' \in R_{i'},\ s \in IS,\ y_{i'j's} = 1 \tag{F.48}$$

$$khe1_j^{in(i),(i'j's)} - (khx_j^{in(i),(i'j's)})_{a^{i'}_{j's}=1} - khea_j^{in(i),(i'j's)} = 0 \qquad i' \in HP,\ j' \in R_{i'},\ s \in IS,\ y_{i'j's} = 1 \tag{F.49}$$

$$kce1_j^{in(i),(i'j's)} - (kcx_j^{in(i),(i'j's)})_{a^{j'}_{i's}=1} - kcea_j^{in(i),(i'j's)} = 0 \qquad i' \in HP,\ j' \in R_{i'},\ s \in IS,\ y_{i'j's} = 1 \tag{F.50}$$

$$kheb_j^{in(i),(i'j's)} + (khx_j^{in(i),(i'j's)})_{a^{i'}_{j's}=1} - khe2_j^{in(i),(i'j's)} = 0 \qquad i' \in HP,\ j' \in R_{i'},\ s \in IS,\ y_{i'j's} = 1 \tag{F.51}$$

$$kceb_j^{in(i),(i'j's)} + (kcx_j^{in(i),(i'j's)})_{a^{j'}_{i's}=1} - kce2_j^{in(i),(i'j's)} = 0 \qquad i' \in HP,\ j' \in R_{i'},\ s \in IS,\ y_{i'j's} = 1 \tag{F.52}$$

$$khea_j^{in(i),(i'j's)} + kcea_j^{in(i),(i'j's)} - kheb_j^{in(i),(i'j's)} - kceb_j^{in(i),(i'j's)} = 0 \qquad i' \in HP,\ j' \in R_{i'},\ s \in IS,\ y_{i'j's} = 1 \tag{F.53}$$

$$\sum_{\substack{i'' \in S_{i'j'}, s, s' \\ x^{j'}_{i''i's's} = 1}} kcb_j^{in(i),(i''i'j's's)} - kce2_j^{in(i),(i'j's)} = 0 \qquad i' \in HP,\ j' \in R_{i'},\ j' \neq j,\ s \in IS,\ y_{i'j's} = 1 \tag{F.54}$$

$$\sum_{\substack{j'' \in S_{i'j'}, s, s' \\ x^{i'}_{j''j's's} = 1}} kcb_j^{in(i),(i'j''j's's)}) - khe2_j^{in(i),(i'j's)} = 0 \qquad i' \in HP,\ j' \in R_{i'},\ s \in IS,\ y_{i'j's} = 1 \tag{F.55}$$

$$\sum_{\substack{i' \in R_j, s \\ z^{j}_{i's} = 1}} kco_j^{in(i),(i'js)} = 1 \tag{F.56}$$

In the LP-shortest path problems the dead times of each hyperstructure element is approximated based on the cost-optimal network of the current structure. However, when the path that determines the shortest time response has been determined (from the solution of the LP problem), then the $k-$variables are fixed for the corresponding input-output pair (*i.e.* the critical path) and the time response is expressed as a function of this path and the stream flows.

F.3 A Dynamic Model for Heat Exchanger Network Hyperstructure

The multiperiod hyperstructure will be modelled as consisting of interconnected elements, for each of which a dynamic linearized model will be given. The basic elements are the countercurrent heat exchanger, the splitter and the ideal mixer. The connections involve the fluid streams and are realized by using pipe-elements.

F.3.1 The Heat Exchanger

The heat exchanger will be modelled in countercurrent configuration. The specific heats and overall heat transfer coefficient are assumed to be constant.

Used parameters:

U : Overall heat transfer coefficient $\left[\mathrm{W.K^{-1}.m^{-2}}\right]$.

A : Heat transfer area $[\mathrm{m^{-2}}]$.

H_1, H_2 : Thermal holdups of the heat exchanger for streams 1 and 2 $\left[\mathrm{J.K^{-1}}\right]$.

τ_{c1}, τ_{c2} : Time constants of the heat exchanger for streams 1 and 2 [s].

Used variables:

θ_{11} : Inlet fluid thermodynamic temperature for stream 1 [K].

θ_{12} : Outlet fluid thermodynamic temperature for stream 1 [K].

θ_{21} : Inlet fluid thermodynamic temperature for stream 2 [K].

θ_{22} : Outlet fluid thermodynamic temperature for stream 2 [K].

F_1 : Heat capacity flowrate for stream 1 $\left[\mathrm{W.K^{-1}}\right]$.

F_2 : Heat capacity flowrate for stream 2 $\left[\mathrm{W.K^{-1}}\right]$.

Tildes on variables denote steady state values. Overscores denote Laplace transforms.

$$\gamma = \frac{AU}{\tilde{F}_1} - \frac{AU}{\tilde{F}_2} \tag{F.57}$$

$$\tilde{\theta}_{12} = \frac{\left(1 - \frac{\tilde{F}_1}{\tilde{F}_2}\right)\tilde{\theta}_{11} + \left(e^{\gamma} - 1\right)\tilde{\theta}_{21}}{e^{\gamma} - \frac{\tilde{F}_1}{\tilde{F}_2}} \tag{F.58}$$

$$\tilde{\theta}_{22} = \frac{\left(1 - \frac{\tilde{F}_2}{\tilde{F}_1}\right)\tilde{\theta}_{21} + \left(e^{-\gamma} - 1\right)\tilde{\theta}_{11}}{e^{-\gamma} - \frac{\tilde{F}_2}{\tilde{F}_1}} \tag{F.59}$$

$$\Xi_{11} = \frac{\overline{\theta}_{12}}{\overline{\theta}_{11}} = \frac{1 - \frac{\tilde{F}_1}{\tilde{F}_2}}{e^{\gamma} - \frac{\tilde{F}_1}{\tilde{F}_2}} \cdot \left\{\frac{e^{-\tau_h s}}{1 + \tau_{c_1} s}\right\} \tag{F.60}$$

$$\Xi_{21} = \frac{\overline{\theta}_{12}}{\overline{\theta}_{21}} = \frac{e^{\gamma} - 1}{e^{\gamma} - \frac{\tilde{F}_1}{\tilde{F}_2}} \left\{\frac{1}{1 + \tau_{c_1} s}\right\} \tag{F.61}$$

$$\Xi_{22} = \frac{\overline{\theta}_{22}}{\overline{\theta}_{21}} = \frac{1 - \frac{\tilde{F}_2}{\tilde{F}_1}}{e^{-\gamma} - \frac{\tilde{F}_2}{\tilde{F}_1}} \left\{\frac{e^{-\tau_c s}}{1 + \tau_{c_2} s}\right\} \tag{F.62}$$

$$\Xi_{12} = \frac{\overline{\theta}_{22}}{\overline{\theta}_{11}} = \frac{e^{-\gamma} - 1}{e^{-\gamma} - \frac{\tilde{F}_2}{\tilde{F}_1}} \left\{\frac{1}{1 + \tau_{c_2} s}\right\} \tag{F.63}$$

$$\Phi_{11} = \frac{\overline{\theta}_{12}}{\overline{F}_1} = \frac{\left(\tilde{\theta}_{12} - \tilde{\theta}_{11}\right)\frac{1}{\tilde{F}_2} + \left(\tilde{\theta}_{12} - \tilde{\theta}_{21}\right)\frac{AU}{\tilde{F}_1^2}e^{\gamma}}{e^{\gamma} - \frac{\tilde{F}_1}{\tilde{F}_2}} \left\{\frac{1}{1 + \tau_{c_1} s}\right\} \tag{F.64}$$

$$\Phi_{21} = \frac{\overline{\theta}_{12}}{\overline{F}_2} = \frac{\left(\tilde{\theta}_{11} - \tilde{\theta}_{12}\right)\frac{\tilde{F}_1}{\tilde{F}_2^2} + \left(\tilde{\theta}_{21} - \tilde{\theta}_{12}\right)\frac{AU}{\tilde{F}_2^2}e^{\gamma}}{e^{\gamma} - \frac{\tilde{F}_1}{\tilde{F}_2}} \left\{\frac{1}{1 + \tau_{c_1} s}\right\} \tag{F.65}$$

$$\Phi_{22} = \frac{\overline{\theta}_{22}}{\overline{F}_2} = \frac{\left(\tilde{\theta}_{22} - \tilde{\theta}_{21}\right)\frac{1}{\tilde{F}_1} + \left(\tilde{\theta}_{22} - \tilde{\theta}_{11}\right)\frac{AU}{\tilde{F}_2^2}e^{-\gamma}}{e^{-\gamma} - \frac{\tilde{F}_2}{\tilde{F}_1}} \left\{\frac{1}{1 + \tau_{c_2} s}\right\} \tag{F.66}$$

$$\Phi_{12} = \frac{\overline{\theta}_{22}}{\overline{F}_1} = \frac{\left(\tilde{\theta}_{21} - \tilde{\theta}_{22}\right)\frac{\tilde{F}_2}{\tilde{F}_1^2} + \left(\tilde{\theta}_{11} - \tilde{\theta}_{22}\right)\frac{AU}{\tilde{F}_1^2}e^{-\gamma}}{e^{-\gamma} - \frac{\tilde{F}_2}{\tilde{F}_1}} \left\{\frac{1}{1 + \tau_{c_2} s}\right\} \tag{F.67}$$

$$\overline{F}_{12} = \overline{F}_{11} = \overline{F}_1 \tag{F.68}$$

$$\overline{F}_{22} = \overline{F}_{21} = \overline{F}_2 \tag{F.69}$$

F.3.2 The Splitter

The splitter is assumed to have one stream entering and n streams emerging. Also, the splitter is assumed to be void of any dead-time. The splitter behaviour will be determined through conservation of mass.

Used parameters: none.

Used variables:

S_i : Split fraction for stream i emerging from the splitter ($i = 1..n$); dimensionless.

F_0 : Heat capacity flowrate for stream 0 entering the splitter $\left[\mathrm{W.K^{-1}}\right]$.

F_i : Heat capacity flowrate for stream i emerging from the splitter ($i = 1..n$). $\left[\mathrm{W.K^{-1}}\right]$.

θ_0 : Fluid thermodynamic temperature for stream 0 entering the splitter [K].

θ_i : Fluid thermodynamic temperature for stream i emerging from the splitter ($i = 1..n$) [K].

Tildes on variables denote steady state values. Overscores denote Laplace transforms.

$$\tilde{\theta}_i = \tilde{\theta}_0 \tag{F.70}$$

$$\overline{\theta}_i = \overline{\theta}_0 \tag{F.71}$$

$$\tilde{F}_i = \tilde{S}_i \tilde{F}_0 \tag{F.72}$$

$$\overline{F}_i = \tilde{S}_i \overline{F}_0 + \overline{S}_i \tilde{F}_0 \tag{F.73}$$

Furthermore:

$$\sum_{i=1}^{n} \tilde{S}_i = 1 \tag{F.74}$$

$$\sum_{i=1}^{n} \overline{S}_i = 0 \tag{F.75}$$

F.3.3 The Mixer

The mixer behaviour will be governed by both conservation of mass and conservation of heat. The mixer is assumed to be void of dead-times, to have one outlet stream and n inlet streams.

Used parameters: none.

Used variables:

F_0 : Heat capacity flowrate for outlet stream 0 emerging from the splitter $\left[\mathrm{W.K^{-1}}\right]$.

F_i : Heat capacity flowrate for stream i entering the splitter $(i = 1..n)$. $\left[\mathrm{W.K^{-1}}\right]$.

θ_0 : Fluid thermodynamic temperature for stream 0 emerging from the splitter [K].

θ_i : Fluid thermodynamic temperature for stream i entering the splitter $(i = 1..n)$ [K].

Tildes on variables denote steady state values. Overscores denote Laplace transforms.

$$\tilde{F}_0 = \sum_{i=1}^{n} \tilde{F}_i \tag{F.76}$$

$$\tilde{\theta}_0 = \frac{\sum_{i=1}^{n} \tilde{F}_i \tilde{\theta}_i}{\sum_{i=1}^{n} \tilde{F}_i} \tag{F.77}$$

$$\frac{\overline{F}_0}{\overline{F}_i} = 1 \tag{F.78}$$

$$\frac{\overline{\theta}_0}{\overline{\theta}_i} = \frac{\tilde{F}_i}{\sum_{j=1}^{n} \tilde{F}_j} \tag{F.79}$$

$$\frac{\overline{\theta}_0}{\overline{F}_i} = \frac{\tilde{\theta}_i}{\sum_{j=1}^{n} \tilde{F}_j} - \frac{\sum_{j=1}^{n} \tilde{F}_j \tilde{\theta}_j}{\left(\sum_{j=1}^{n} \tilde{F}_j\right)^2} = \frac{\tilde{\theta}_i - \tilde{\theta}_0}{\sum_{j=1}^{n} \tilde{F}_j} \tag{F.80}$$

F.3.4 The Pipe

The pipe through which the fluid flows, is characterized by a time delay. This time delay will be considered only a function of the steady state flowrate through the pipe.

Used parameters:

τ : The time delay, a function of the steady state flowrate as: $\tau = \frac{V}{\Phi}$ where Φ is the volume flowrate and V the volume of the pipe.

Used variables:

F_0 : Heat capacity flowrate for the stream entering the pipe. $\left[\mathrm{W.K^{-1}}\right]$.

F_1 : Heat capacity flowrate for the stream emerging from the pipe $\left[\mathrm{W.K^{-1}}\right]$.

θ_0 : Fluid thermodynamic temperature for the stream entering the pipe [K].

θ_1 : Fluid thermodynamic temperature for the stream emerging from the pipe [K].

$$\tilde{F}_1 = \tilde{F}_0 \tag{F.81}$$

$$\tilde{\theta}_1 = \tilde{\theta}_0 \tag{F.82}$$

$$\frac{\overline{F}_1}{\overline{F}_0} = 1 \tag{F.83}$$

$$\frac{\overline{\theta}_1}{\overline{F}_0} = 0 \tag{F.84}$$

$$\frac{\overline{\theta}_1}{\overline{\theta}_0} = e^{-\tau s} \tag{F.85}$$

Appendix G

MEN Hyperstructure Model

To model the Mass Exchange Network hyperstructure the following sets and the variables of Tables G.1 and G.2 are introduced:

- Sets:

$$\mathcal{RLT} = \mathbf{RS} \cup \mathbf{LS}$$

$$\mathcal{M} = \{(i,j) | i \in \mathbf{RS}, j \in \mathbf{LS} \text{ and the match (i,j) is possible}\}$$

$$\mathcal{MR} = \{(j,k) | j \in \mathbf{LS}_{reg}, k \in \mathbf{HS} \text{ and the match (j,k) is possible}\}$$

$$\mathcal{LM}_i = \{j \in \mathbf{LS}, \text{ where } (i,j) \in \mathcal{M}\}$$

$$\mathcal{RM}_j = \{i \in \mathbf{RS}, \text{ where } (i,j) \in \mathcal{M}\}$$

$$\mathcal{HMR}_j = \{k \in \mathbf{HS}, \text{ where } (j,k) \in \mathcal{MR}\}$$

$$\mathcal{LMR}_k = \{j \in \mathbf{LS}_{reg}, \text{ where } (j,k) \in \mathcal{MR}\}$$

$$\mathcal{M}p = \{(i,j) \in \mathcal{M} \text{ and mass exchanger (i,j) is a perforated plate column}\}$$

$$\mathcal{M}t = \{(i,j) \in \mathcal{M} \text{ and mass exchanger (i,j) is a packed column}\}$$

$$\mathcal{MR}p = \{(j,k) \in \mathcal{MR} \text{ and mass exchanger (j,k) is a perforated plate column}\}$$

$$\mathcal{MR}t = \{(j,k) \in \mathcal{MR} \text{ and mass exchanger (j,k) is a packed column}\}$$

$$\mathcal{RB}_{ij} = \{j' \in \mathcal{LM}_i \text{ s.t. a bypass flow of stream } i, \text{ from exchanger } (i,j') \text{ to } (i,j) \text{ is possible}\}$$

$$\mathcal{LB}_{ij} = \{i' \in \mathcal{RM}_j \text{ s.t. a bypass flow of stream } j, \text{ from exchanger } (i', j) \text{ to } (i, j) \text{ is possible}\}$$

$$\mathcal{LBR}_{jk} = \{k' \in \mathcal{HMR}_j \text{ s.t. a bypass flow of stream } j, \text{ from exchanger } (i, k') \text{ to } (i, k) \text{ is possible}\}$$

$$\mathcal{HBR}_{jk} = \{j' \in \mathcal{LMR}_k \text{ s.t. a bypass flow of stream } k, \text{ from exchanger } (j', k) \text{ to } (j, k) \text{ is possible}\}$$

$$\mathcal{LPR}_{ij} = \{k | i \in \mathcal{LM}_j \text{ and } k \in \mathcal{HMR}_j \text{ and a bypass flow of j from (i,j) to (j,k) is possible}\}$$

$$\mathcal{LRR}_{jk} = \{i | i \in \mathcal{LM}_j \text{ and } k \in \mathcal{HMR}_j \text{ and a bypass flow of j from (j,k) to (i,j) is possible}\}$$

$$\mathcal{S}_{ij} = \{s | s^{th} \text{ alternative - "subnetwork", that } (i, j) \text{ can exchange mass}\}$$

$$\mathcal{T}_{jk} = \{t | \ t^{th} \text{ alternative - "subnetwork" for mass exchange between j and k}\}$$

Then the overall MEN synthesis model involves:

1. Overall mass balances at the initial splitter of each stream

$$\sum_{(j \in \mathcal{LM}_i), s} g^I_{ijs} - G_i = 0, \qquad i \in \mathbf{RS} \tag{G.1}$$

$$\sum_{(j \in \mathcal{LMR}_k), t} f^I_{jkt} - H_k = 0, \qquad k \in \mathbf{HS} \tag{G.2}$$

$$\sum_{(i \in \mathcal{RM}_j), s} l^I_{ijs} - L_i = 0, \qquad j \in \mathbf{LS} \tag{G.3}$$

2. Overall mass balances at the mixer preceding each potential mass exchanger for each stream

$$g^I_{ijs} + \sum_{(j' \in \mathcal{RB}_{ij}), s'} g^{Bi}_{jj'ss'} - g^E_{ijs} = 0 \quad (i, j) \in \mathcal{M} \tag{G.4}$$

$$f^I_{jkt} + \sum_{(j' \in \mathcal{HBR}_{jk}), t'} f^{Bk}_{jj'tt'} - f^E_{jkt} = 0 \quad (j, k) \in \mathcal{MR} \tag{G.5}$$

$$l^I_{ijs} + \sum_{(i' \in \mathcal{LB}_{ij}), s'} l^{Bj}_{ii'ss'} - l^E_{ijs} = 0 \quad (i, j) \in \mathcal{M}, \ j \in \mathbf{LS} - \mathbf{LS}_{reg} \tag{G.6}$$

$$l^I_{ijs} + \sum_{(i' \in \mathcal{LB}_{ij}), s'} l^{Bj}_{ii'ss'} + \sum_{k : i \in \mathcal{LRR}_{jk}} lrr_{ijkst} - l^E_{ijs} = 0 \quad (i, j) \in \mathcal{M}, \ j \in \mathbf{LS}_{reg} \tag{G.7}$$

$$\sum_{(k' \in \mathcal{LBR}_{jk}), t'} lr^{Bj}_{kk'tt'} + \sum_{i : k \in \mathcal{LPR}_{ij}} lpr_{ijkst} - lr^E_{jkt} = 0 \quad (j, k) \in \mathcal{MR} \tag{G.8}$$

3. Overall mass balances at the splitter after each exchanger for each stream

$$g^O_{ijs} + \sum_{(j' \in \mathcal{RB}_{ij'}),s'} g^{Bi}_{j'js's} - g^E_{ijs} = 0 \quad (i,j) \in \mathcal{M} \tag{G.9}$$

$$f^O_{jkt} + \sum_{(j':j \in \mathcal{HBR}_{j'k}),t'} f^{Bk}_{j'jt't} - f^E_{jkt} = 0 \quad (j,k) \in \mathcal{MR} \tag{G.10}$$

$$l^O_{ijs} + \sum_{(i' \in \mathcal{LB}_{i'j}),s'} l^{Bj}_{i'is's} - l^E_{ijs} = 0 \quad (i,j) \in \mathcal{M},\ j \in \mathbf{LS} - \mathbf{LS}_{reg} \tag{G.11}$$

$$l^O_{ijs} + \sum_{(i' \in \mathcal{LB}_{ij}),s'} l^{Bj}_{i'is's} + \sum_{(k \in \mathcal{LPR}_{ij}),t} lpr_{ijkst} - l^E_{ijs} = 0 \quad (i,j) \in \mathcal{M},\ j \in \mathbf{LS}_{reg} \tag{G.12}$$

$$lr^O_{jkt} + \sum_{(k' \in \mathcal{LBR}_{jk}),t'} lr^{Bj}_{k'kt't} + \sum_{(j \in \mathcal{LRR}_{jk}),s} lrr_{ijkst} - lr^E_{jkt} = 0 \quad (j,k) \in \mathcal{MR},\ j \in \mathbf{LS}_{reg} \tag{G.13}$$

4. Mass balances for the transferable component at the mixer preceding each exchanger for each stream

$$g^I_{ijs} y^S_i + \sum_{(j' \in \mathcal{RB}_{ij}),s'} g^{Bi}_{jj'ss'} y^O_{ij's'} - g^E_{ijs} y^I_{ijs} = 0 \quad (i,j) \in \mathcal{M} \tag{G.14}$$

$$f^I_{jkt} z^S_k + \sum_{(j' \in \mathcal{HBR}_{jk}),t'} f^{Bk}_{jj'tt'} z^O_{j'kt'} - f^E_{jkt} z^I_{jkt} = 0 \quad (j,k) \in \mathcal{MR} \tag{G.15}$$

$$l^I_{ijs} x^S_j + \sum_{(i' \in \mathcal{LB}_{ij}),s'} l^{Bj}_{ii'ss'} x^O_{i'js'} - l^E_{ijs} x^I_{ijs} = 0 \quad (i,j) \in \mathcal{M},\ j \in \mathbf{LS} - \mathbf{LS}_{reg} \tag{G.16}$$

$$l^I_{ijs} x^S_j + \sum_{(i' \in \mathcal{LB}_{ij}),s'} l^{Bj}_{ii'ss'} x^O_{i'js'} + \sum_{k:i \in \mathcal{LRR}_{jk}} lrr_{ijkst} xr^O_{jkt} - l^E_{ijs} x^I_{ijs} = 0 \quad (i,j) \in \mathcal{M},\ j \in \mathbf{LS}_{reg} \tag{G.17}$$

$$\sum_{(k' \in \mathcal{LBR}_{jk}),t'} lr^{Bj}_{kk'tt'} xr^O_{jk't'} + \sum_{i:k \in \mathcal{LPR}_{ij}} lpr_{ijkst} x^O_{ijs} - lr^E_{jkt} xr^I_{jkt} = 0 \quad (j,k) \in \mathcal{MR} \tag{G.18}$$

5. Mass balances for the transferable component at the final mixer of each stream

$$\sum_{(j \in \mathcal{LM}_i),s} g^O_{ijs} y^O_{ijs} - G_i y^T_i = 0 \quad i \in \mathbf{RS} \tag{G.19}$$

$$\sum_{(i \in \mathcal{RM}_j),s} l^O_{ijs} x^O_{ijs} - L_j x^T_j = 0 \quad j \in \mathbf{LS} - \mathbf{LS}_{reg} \tag{G.20}$$

$$\sum_{(i \in \mathcal{RM}_j),s} l^O_{ijs} x^O_{ijs} + \sum_{k \in \mathcal{HMR}_j,t} lr^O_{jkt} xr^O_{jkt} - L_j x^T_j = 0 \quad j \in \mathbf{LS} \tag{G.21}$$

$$\sum_{j \in \mathcal{LMR}_k,t} f^O_{jkt} z^O_{jkt} - H_k z^T_k = 0 \quad k \in \mathbf{HS} \tag{G.22}$$

6. Mass balances for the transferable component at each potential exchanger for each stream

$$g^E_{ijs}(y^I_{ijs} - y^O_{ijs}) - M_{ijs} = 0 \quad (i,j) \in \mathcal{M} \tag{G.23}$$

$$l^E_{ijs}(x^O_{ijs} - x^I_{ijs}) - M_{ijs} = 0 \quad (i,j) \in \mathcal{M} \tag{G.24}$$

$$f^E_{jkt}(z^O_{jkt} - z^I_{jkt}) - MR_{jkt} = 0 \quad (j,k) \in \mathcal{MR} \tag{G.25}$$

$$lr^E_{jkt}(xr^I_{jkt} - xr^O_{jkt}) - MR_{jkt} = 0 \quad (j,k) \in \mathcal{MR} \tag{G.26}$$

7. Match decisions. Constraints (G.27) and (G.28) define the existence of a mass exchanger between a rich and a lean stream and a regenerating mass exchanger respectively.

$$M_{ijs} - Y_{ijs}\mathbf{U} \leq 0 \quad (i,j) \in \mathcal{M} \tag{G.27}$$

$$MR_{jkt} - W_{jkt}\mathbf{U} \leq 0 \quad (j,k) \in \mathcal{MR} \tag{G.28}$$

8. Feasibility constraints

$$m_{ij}(x^O_{ijs} + \epsilon_{ij}) + b_{ij} - y^I_{ijs} \leq 0 \quad (i,j) \in \mathcal{M} \tag{G.29}$$

$$m_{ij}(x^I_{ijs} + \epsilon_{ij}) + b_{ij} - y^O_{ijs} \leq 0 \quad (i,j) \in \mathcal{M} \tag{G.30}$$

$$n_{jk}(z^O_{jkt} + \epsilon_{jk}) + c_{jk} - xr^I_{jkt} \leq 0 \quad (j,k) \in \mathcal{MR} \tag{G.31}$$

$$n_{jk}(z^I_{jkt} + \epsilon_{jk}) + c_{jk} - xr^O_{jkt} \leq 0 \quad (j,k) \in \mathcal{MR} \tag{G.32}$$

9. Logical mixed integer constraints. Constraints below connect the flows of the superstructure of each stream with the existence of each match:

$$g^E_{ijs} - Y_{ijs}\mathbf{U} \leq 0 \quad (i,j) \in \mathcal{M} \tag{G.33}$$

$$g^I_{ijs} - Y_{ijs}\mathbf{U} \leq 0 \quad (i,j) \in \mathcal{M} \tag{G.34}$$

$$g^O_{ijs} - Y_{ijs}\mathbf{U} \leq 0 \quad (i,j) \in \mathcal{M} \tag{G.35}$$

$$\sum_{(j' \in \mathcal{RB}_{ij}),s'} g^{Bi}_{jj'ss'} - Y_{ijs}\mathbf{U} \leq 0 \quad (i,j) \in \mathcal{M} \tag{G.36}$$

$$l^E_{ijs} - Y_{ijs}\mathbf{U} \leq 0 \quad (i,j) \in \mathcal{M} \tag{G.37}$$

$$l^I_{ijs} - Y_{ijs}\mathbf{U} \leq 0 \quad (i,j) \in \mathcal{M} \tag{G.38}$$

$$l^O_{ijs} - Y_{ijs}\mathbf{U} \leq 0 \quad (i,j) \in \mathcal{M} \tag{G.39}$$

$$\sum_{(i' \in \mathcal{LB}_{ij}),s'} l^{Bj}_{ii'ss'} - \mathcal{Y}_{ijs}\mathbf{U} \leq 0 \quad (i,j) \in \mathcal{M} \tag{G.40}$$

$$f^E_{jkt} - W_{jkt}\mathbf{U} \leq 0 \quad (j,k) \in \mathcal{MR} \tag{G.41}$$

$$f^I_{jkt} - W_{jkt}\mathbf{U} \leq 0 \quad (j,k) \in \mathcal{MR} \tag{G.42}$$

$$f^O_{jkt} - W_{jkt}\mathbf{U} \leq 0 \quad (j,k) \in \mathcal{MR} \tag{G.43}$$

$$\sum_{(j' \in \mathcal{HBR}_{jk}),t'} f^{Bk}_{jj'tt'} - w_{jkt}\mathbf{U} \leq 0 \quad (j,k) \in \mathcal{MR} \tag{G.44}$$

$$lr^E_{jkt} - W_{jkt}\mathbf{U} \leq 0 \quad (j,k) \in \mathcal{MR} \tag{G.45}$$

$$lr^I_{jkt} - W_{jkt}\mathbf{U} \leq 0 \quad (j,k) \in \mathcal{MR} \tag{G.46}$$

$$lr^O_{jkt} - W_{jkt}\mathbf{U} \leq 0 \quad (j,k) \in \mathcal{MR} \tag{G.47}$$

$$\sum_{(k' \in \mathcal{LBR}_{jk}),t'} lr^{Bj}_{kk'tt'} - W_{jkt}\mathbf{U} \leq 0 \quad (j,k) \in \mathcal{MR} \tag{G.48}$$

$$\sum_{(k \in \mathcal{LPR}_{ij}),t} lpr_{ijkst} + \sum_{k:i \in \mathcal{LRR}_{jk},t} lrr_{ijkst} - Y_{ijs}\mathbf{U} \leq 0 \quad (i,j) \in \mathcal{M},\ j \in \mathbf{LS}_{reg} \tag{G.49}$$

$$\sum_{i:k \in \mathcal{LPR}_{ij},s} lpr_{ijkst} + \sum_{(k \in \mathcal{LRR}_{jk}),s} lrr_{ijkst} - W_{jkt}\mathbf{U} \leq 0 \quad (j,k) \in \mathcal{MR},\ j \in \mathbf{LS}_{reg} \tag{G.50}$$

where $\mathbf{U}$ is a large positive number.

10. Sizing equations for the mass transfer units. When mass exchange takes place in a perforated-plate column, the number of required stages can be determined from the Kremser equation:

$$Nst_{ijs} = \frac{\ln\left(\left(1 - \frac{m_{ij}g^E_{ijs}}{l^E_{ijs}}\right)\frac{(y^I_{ijs} - m_{ij}x^I_{ijs} - b_{ij})}{(y^O_{ijs} - m_{ij}x^I_{ijs} - b_{ij})} + \frac{m_{ij}g^E_{ijs}}{l^E_{ijs}}\right)}{\ln\left(\frac{m_{ij}g^E_{ijs}}{l^E_{ijs}}\right)} \quad (i,j) \in \mathcal{M}p \tag{G.51}$$

$$NRst_{jkt} = \frac{\ln\left(\left(1 - \frac{n_{jk}lr^E_{jkt}}{f^E_{jkt}}\right)\frac{(xr^I_{jkt} - n_{jk}z^O_{jkt} - c_{jk})}{(xr^I_{jkt} - n_{jk}z^I_{jkt} - c_{jk})} + \frac{n_{jk}lr^E_{jkt}}{f^E_{jkt}}\right)}{\ln\left(\frac{n_{jk}lr^E_{jkt}}{f^E_{jkt}}\right)} \quad (j,k) \in \mathcal{MR}p \tag{G.52}$$

When absorption or stripping takes place, a packed tower is considered for the mass exchange, the height of which is determined by the number of equilibrium stages N_{OR} and the equivalent height of each equilibrium stage H_{OR} (Kohl, 1987):

$$H_{OR,ijs} = \frac{g^E_{ijs}}{K_y a(y - y^{eq})_{lm}} \qquad (i,j) \in \mathcal{M}t \tag{G.53}$$

where $K_y a$ is the mass transfer coefficient, y the mass fraction in the bulk rich phase, y^{eq} the rich stream composition in equilibrium with the lean stream and $(y - y^{eq})_{lm}$ the logarithmic mean difference over the entire column.

$$N_{OR,ijs} = \frac{ln(\frac{YX1_{ijs}}{YX2_{ijs}})}{(1 - m_{ij}\frac{g^E_{ijs}}{l^E_{ijs}})} \qquad (i,j) \in \mathcal{M}t \tag{G.54}$$

Similarly for regeneration matches:

$$HR_{OR,jkt} = \frac{lr^E_{jkt}}{K_x a(xr - xr^{eq})_{lm}} \qquad (j,k) \in \mathcal{MR}t \tag{G.55}$$

$$NR_{OR,jkt} = \frac{ln(\frac{XZ1_{jkt}}{XZ2_{jkt}})}{(1 - n_{jk}\frac{lr^E_{jkt}}{f^E_{jkt}})} \qquad (j,k) \in \mathcal{MR}t \tag{G.56}$$

When adsorption or ion-exchange occurs a fixed-bed contactor is considered and similar sizing equations are used. The type of mass exchange is considered given for the available pairs of rich and lean streams. The characteristic size of each potential mass exchange contactor is expressed analytically in terms of the network variables and the associated annualized cost is introduced explicitly in the objective function.

11. Objective Function.

The overall annualized cost to be minimized involves the cost of the consumed lean streams that are not regenerated, the regenerants and the investment cost for the mass transfer units and piping layout. In this work, piping cost is not considered, although in general, it can be expressed in terms of the network flows and introduced in the objective function. Thus:

$$\begin{aligned}\text{TAC} = &\sum_{j\in\mathcal{L}}(AC_j)(L_j) + \sum_{k\in\mathcal{H}}(AC^h_k)(H_k) + \sum_{(i,j)\in\mathcal{M}p,s}(AC_{st})(N_{st,ijs}) + \\ &\sum_{(i,j)\in\mathcal{M}t,s}(AC_h)(H_{st,ijs}) + \sum_{(j,k)\in\mathcal{MR}p,t}(AC_{st})(NR_{st,jkt}) + \sum_{(j,k)\in\mathcal{MR}t,t}(AC_h)(HR_{st,jkt})\end{aligned} \tag{G.57}$$

The MEN synthesis problem is formulated as a MINLP and Generalized Benders decomposition is employed for its solution. The binary variables Y_{ijs} and W_{jkt} are selected as complicating variables. The Primal NLP subproblem involves equations (G.1)-(G.56) and the objective function in (G.57), while the Master MILP involves the Lagrangian of the objective function and the logical mixed integer constraints.

Y_{ijs}	*Binary* variable to denote the existence of a match between rich stream i and lean stream j, in "subnetwork" s (denoting potential multiple mass exchange)
W_{jkt}	*Binary* variable to denote the existence of a match between regenerable lean stream j and regenerant k, in "subnetwork" t (denoting potential multiple mass exchange)
L_j	Mass flowrate of lean stream j
H_k	Mass flowrate of regenerant k
M_{ijs}	Mass exchanged at the unit corresponding to the match (i, j, s)
MR_{jkt}	Mass exchanged at the exchanger corresponding to the match (j, k, t)
g^I_{ijs}	Flow of rich stream i from the initial splitter of the stream to the mixer preceding the match (i, j, s)
g^E_{ijs}	Flow of rich stream i through the unit of the match (i, j, s)
$g^{Bi}_{jj's s'}$	Bypass flow of rich stream i from match (i, j', s') to match (i, j, s)
g^O_{ijs}	Flow of rich stream i from the splitter after the match (i, j, s) to the final mixer of the stream
l^I_{ijs}	Flow of lean stream j from the initial splitter of the stream to the mixer preceding the match (i, j, s)
l^E_{ijs}	Flow of lean stream j through the unit of the match (i, j, s)
$l^{Bj}_{ii'ss'}$	Bypass flow of lean stream j from match (i', j, s') to match (i, j, s)
l^O_{ijs}	Flow of lean stream j from the splitter after the match (i, j, s) to the final mixer of the stream
f^I_{jkt}	Flow of regenerant k from the initial splitter of the stream to the mixer preceding the match (j, k, t)
f^E_{jkt}	Flow of regenerant k through the exchanger of the match (j, k, t)
$f^{Bk}_{jj'tt'}$	Bypass flow of regenerant k from match (j', k, t') to match (j, k, t)
f^O_{jkt}	Flow of regenerant k from the splitter after the match (j, k, t) to the final mixer of the stream
lr^E_{jkt}	Flow of lean stream j through the regenerating exchanger of the match (j, k, t)
$lr^{Bj}_{kk'tt'}$	Bypass flow of lean stream j from match (j, k', t') to match (j, k, t) in regeneration part of the network
lr^O_{jkt}	Flow of lean stream j from the splitter after the regenerating match (j, k, t) to the final mixer of the stream
lpr_{ijkst}	Flow of regenerable lean stream j from the match (i, j, s) to the regenerating exchanger (j, k, t)
lrr_{ijkst}	Flow of regenerable lean stream j from regenerating exchanger (j, k, t) to exchanger (i, j, s)
y^I_{ijs}	Composition of rich stream i prior to match/unit (i, j, s)
y^O_{ijs}	Composition of rich stream i after the match (i, j, s)
y^T_i	Final composition of rich stream i, when this is upper-bounded by a given value y^U_i
x^I_{ijs}	Composition of lean stream j prior to the match (i, j, s)
x^O_{ijs}	Composition of lean stream j after the match (i, j, s)
x^T_j	Final composition of lean stream j
z^I_{jkt}	Composition of regenerant k prior to exchanger (j, k, t)
z^O_{jkt}	Composition of regenerant k after the exchanger (j, k, t)
z^T_k	Final composition of regenerant k, when this is upper-bounded by a given value z^U_k
xr^I_{jkt}	Composition of lean stream j prior to exchanger (j, k, t)
xr^O_{jkt}	Composition of lean stream j after the exchanger (j, k, t)

Table G.1: Variables for MEN Hyperstructure Model.

$YX1_{ijs}$	Driving force in terms of compositions difference at the inlet of the rich stream at the unit (i, j, s)
$YX2_{ijs}$	Driving force in terms of compositions difference at the outlet of the rich stream at the unit (i, j, s)
Nst_{ijs}	Number of theoretical plates in extraction column (i, j, s), when $(i, j) \in \mathcal{M}p$
NOR_{ijs}	Number of theoretical equilibrium stages in packed column (i, j, s), when $(i, j) \in \mathcal{M}t$
HOR_{ijs}	Height of each theoretical equilibrium stage in packed column (i, j, s), when $(i, j) \in \mathcal{M}t$
$XZ1_{jkt}$	Driving force in terms of compositions difference at the inlet of the regenerable lean stream at the match (j, k, t)
$XZ2_{jkt}$	Driving force in terms of compositions difference at the outlet of the regenerable lean stream at the match (j, k, t)
$NRst_{jkt}$	Number of theoretical plates in extraction column (j, k, t), when $(j, k) \in \mathcal{MR}p$
$NRor_{jkt}$	Number of theoretical equilibrium stages in packed column (j, k, t), when $(j, k) \in \mathcal{MR}t$
$HRor_{jkt}$	Height of each theoretical equilibrium stage in packed column (j, k, t), when $(j, k) \in \mathcal{MR}t$

Table G.2: Variables for MEN Hyperstructure Model (cont'd).

Appendix H

Mass/Heat Exchange Hyperstructure Model for Acetone Recovery Example

The mass/heat exchange hyperstructure in the acetone recovery example involves 4 mass/heat transfer blocks and 11 pure heat exchangers (see Figure 6.9). The synthesis model involves:

- Mass balances for total stream flows
  - at initial stream splitters, *e.g.* at the initial splitter of PA.

$$F_{PA}^{IN} = f_{PA,PA-LP}^{Rin} + f_{PA,PA-LW}^{Rin}$$

where F_{PA}^{IN} is the total flow of air mixture and $f_{PA,PA-LP}^{Rin}$, $f_{PA,PA-LW}^{Rin}$ the flows towards its potential exchangers (see Figure 6.9).

  - at stream splitters at the outlet of each exchange block (mass/heat or pure heat), *e.g.* at the lean side splitter after $PA - LW$.

$$\begin{aligned} f_{PA-LW}^{L,out} = {} & f_{LW-VW}^{LBR,PA-LW} + f_{LP-VP}^{LBR,PA-LW} + f_{PA-LP}^{LBL,PA-LW} + f_{PA-LW}^{LBL,PA-LW} + \\ & f_{LP-LP}^{LBH,PA-LW} + f_{LP-LW}^{LBH,PA-LW} + f_{LP-CW}^{LBH,PA-LW} + f_{LW-LP}^{LBH,PA-LW} + \\ & f_{LW-LW}^{LBH,PA-LW} + f_{LW-CW}^{LBH,PA-LW} + f_{LP-LP}^{LBC,PA-LW} + f_{VP-LP}^{LBC,PA-LW} + \\ & f_{LW-LP}^{LBC,PA-LW} + f_{LP-LW}^{LBC,PA-LW} + f_{VP-LW}^{LBC,PA-LW} + f_{LW-LW}^{LBC,PA-LW} + \\ & f_{S-LW}^{LBC,PA-LW} + f_{LP}^{LO,PA-LW} + f_{LW}^{LO,PA-LW} \end{aligned}$$

where $f_{PA-LW}^{L,out}$ is the flow out of the lean side of exchanger (PA-LW), $f_{LW-VW}^{LBR,PA-LW}$ is the bypass flow from the Lean side of (PA-LW) to the Rich side of (LW-VW) and so on. The above flows are possible according to phase-mixing assumptions. However, some of them, *e.g.* $f_{LP-LP}^{LBC,PA-LW}$, which seem improbable, are eliminated by optimization.

- at mixers prior to heat exchanger sides (mass/heat or pure heat), *e.g.* at the lean side mixer prior to $PA-LW$.

$$\begin{aligned} f_{PA-LW}^{L,in} = {} & f_{PA-LW}^{LBL,PA-LP} + f_{PA-LW}^{RBL,LW-VW} + f_{PA-LW}^{RBL,LP-VW} + f_{PA-LW}^{HBL,LP-LP} + \\ & f_{PA-LW}^{HBL,LP-LW} + f_{PA-LW}^{HBL,LP-CW} + f_{PA-LW}^{HBL,LW-LP} + f_{PA-LW}^{HBL,LW-LW} + \\ & f_{PA-LW}^{HBL,LW,CW} + f_{PA-LW}^{CBL,LP-LP} + f_{PA-LW}^{CBL,VP,LP} + f_{PA-LW}^{CBL,LW-LP} + \\ & f_{PA-LW}^{CBL,S-LP} + f_{PA-LW}^{CBL,LP-LW} + f_{PA-LW}^{CBL,VP-LW} + f_{PA-LW}^{CBL,LW-LW} + \\ & f_{PA-LW}^{CBL,S-LW} + f_{W,PA-LW}^{Lin} \end{aligned}$$

where $f_{PA-LW}^{L,in}$ is the flow into the lean side of exchanger (PA-LW) and the rest flows are defined as above.

- at final mixers, *e.g.* at the final mixer of acetone-rich liquid product:

$$\begin{aligned} F_{LP}^{OUT} = {} & f_{LP,PA-LW}^{LO} + f_{LP,PA-LP}^{LO} + f_{LP,LP-VP}^{RO} + f_{LP,LW-VW}^{RO} + \\ & f_{LP,LP-LP}^{HO} + f_{LP,LP-LW}^{HO} + f_{LP,LP-CW}^{HO} + f_{LP,LW-LP}^{HO} + \\ & f_{LP,LW-LW}^{HO} + f_{LP,LW-CW}^{HO} + f_{LP,LP-LP}^{CO} + f_{LP,VP-LP}^{CO} + \\ & f_{LP,LW-LP}^{CO} + f_{LP,S-LP}^{CO} + f_{LP,LP-LW}^{CO} + f_{LP,VP-LW}^{CO} + \\ & f_{LP,LW-LW}^{CO} + f_{LP,S-LW}^{CO} \end{aligned}$$

where F_{LP}^{OUT} is the desired product flow, $f_{LP,PA-LW}^{LO}$ the flow out from the lean side of PA-LW towards the final mixers of LP, etc.

- Component mass balances, similarly to total flow mass balances at:

  - mixers prior to each exchanger side, to determine inlet compositions to the corresponding exchanger side
  - final mixers of streams, to determine outlet compositions.

- Mass balances for each component at each mass/heat exchanger block, *e.g.* for acetone at PA-LW:

$$f^{Lin}_{PA-LW} x^{Lin,acet}_{PA-LW} + f^{Rin}_{PA-LW} x^{Rin,acet}_{PA-LW} - f^{Rout}_{PA-LW} x^{Rout,acet}_{PA-LW} - f^{Lout}_{PA-LW} x^{Lout,acet}_{PA-LW} + \mathcal{F}(reactions)$$

  where $x's$ are compositions, correspondingly to flows and $\mathcal{F}(reactions)$ accounts for possible generation or consumption of acetone, if any reactions are known to take place in a (PA-LW) system.

- Summation of molar fractions (equal to 1) at each mass/heat exchanger outlet.

- Enthalpy balances at the mixers of the hyperstructure, to determine the mixer outlet temperature.

- Enthalpy balances at each mass/heat exchange block, where reaction enthalpy and/or phase change enthalpy are taken into considerations.

- Energy balances at each heat exchange block, accounting for phase-change enthalpy.

- Phase-defining constraints at the hyperstructure mixers and each exchanger outlet, *e.g.* at the outlet of rich side of (LW-VW):

$$x^{Lout,acet}_{LW-VW} k^{Lout,acet}_{LW-VW} + x^{Lout,water}_{LW-VW} k^{Lout,water}_{LW-VW} \leq 1$$

  where k's define phase equilibrium constants (note that air may not be possible in this mixture, at moderate conditions).

- Temperature driving force constraints at heat exchangers

The existence of each mass/heat and pure heat transfer block is denoted by a binary variable. Any air-liquid mass transfer block is sized as an absorption tower and Kremser equation (Douglas, 1988) is employed:

$$N_{ij} = \frac{ln\left(\left(1 - \frac{m_{ijc} f_{ij}^{R}}{f_{ij}^{L}}\right) \frac{(x_{ij}^{Rin,c} - m_{ijc} x_{ij}^{Lin,c} - b_{ijc})}{(x_{ij}^{Rout,c} - m_{ijc} x_{ij}^{Lin,c} - b_{ijc})} + \frac{m_{ijc} f_{ij}^{R}}{f_{ij}^{L}}\right)}{ln\left(\frac{m_{ijc} f_{ij}^{R}}{f_{ij}^{L}}\right)}$$

where N_{ij} is the number of absorption trays corresponding to the mass/heat exchange match between (i, j), f_{ij}^{R} and f_{ij}^{L} are average flowrates of the rich and the lean sides respectively, $x_{ij}^{Rin,c}$, $x_{ij}^{Rout,c}$, $x_{ij}^{Lin,c}$ inlet and outlet compositions of the transferred component c, accordingly and m_{ijc} and b_{ijc} constants that govern the mass transfer.

The arrangement of two liquid-vapour mass transfer blocks, connected counter-currently at the lean and the rich sides, which is identified through integer constraints on decision/structural variables accounting for block interconnections, is sized as a conventional distillation column, based on Fenske and Underwood equations, with the simplifying assumptions of:

$$N = 2N_{min}$$

$$R = 1.2R_{min}$$

where N is the number of trays, N_{min} the minimum number of trays, R the reflux ratio and R_{min} the minimum reflux ratio, calculated from:

$$N_{min} = \frac{ln\left[\left(\frac{x_{top}^{Lin,acet}}{(1 - x_{top}^{Lin,acet})}\right)\left(\frac{x_{bottom}^{Rout,acet}}{(1 - x_{bottom}^{Rout,acet})}\right)\right]}{ln\alpha}$$

where $x_{top}^{Lin,acet}$, $x_{bottom}^{Rout,acet}$ account for top and bottom acetone compositions at the column and α for relative volatility.

$$R_{min} = \left(\frac{1}{\alpha - 1}\right)\left[\frac{x_{top}^{Lin,acet}}{x_{f}^{acet}} - \frac{\alpha(1 - x_{top}^{Lin,acet})}{1 - x_{f}^{acet}}\right]$$

where x_{f}^{acet} is the feed acetone composition.

The resulting MINLP model features 848 rows, 544 continuous variables and 127 binary variables (16 corresponding to mass/heat and heat exchange blocks). The model was solved employing Generalized Benders Decomposition through the modelling system GAMS. Starting from the structure illustrated in Figure 6.11, the solution was obtained in 6 GBD iterations.

BIBL.
LONDIN.
UNIV.