Biotechnology Notes 4 (2023) 14–19

Contents lists available at ScienceDirect

Biotechnology Notes

journal homepage: www.keaipublishing.com/en/journals/biotechnology-notes/

Over-expression of α-bisabolene by metabolic engineering of Yarrowia lipolytica employing a golden gate DNA assembly toolbox

Walid M. El-Sharoud [a,*], Samar A. Zalma [a], Leonardo Rios-Solis [b], Rodrigo Ledesma-Amaro [c]

[a] Synthetic Biology Laboratory, Faculty of Agriculture, Mansoura University, Egypt
[b] Institute for Bioengineering and Centre for Synthetic and Systems Biology, University of Edinburgh, UK
[c] Imperial College Centre for Synthetic Biology and Department of Bioengineering, Imperial College London, UK

ARTICLE INFO

Keywords:
Yarrowia lipolytica
Oleaginous yeasts
Biofuels
Terpenoids
α-bisabolene
Metabolic engineering

ABSTRACT

Yarrowia lipolytica is a modern workhorse for biotechnology that is amenable to genetic manipulations and can produce high levels of various enzymes. The present study was designed to engineer *Y. lipolytica* for the over-expression of α-bisabolene, a valuable biofuel precursor and pharmaceutical, making use of this yeast's ability to accumulate lipids, and with the use of a golden gate DNA assembly (GG) toolbox. By transforming *Y. lipolytica* with a GG genetic construct involving truncated 3-hydroxy-3-methyl-glutaryle coenzyme A reductase (*tHMG*) and α-bisabolene synthase (*Bis*) genes controlled by the strong TEF promoter and Lip2 terminator, the engineered yeast was able to produce 489 mg l^{-1} of α-bisabolene. This was increased to 816 mg l^{-1} by transforming a lipid-over-accumulating *Y. lipolytica* strain with the same genetic construct. Higher production titers of up to 1243 mg l^{-1} could be also achieved by varying the culture conditions of the transformed strains.

1. Introduction

Yarrowia lipolytica is a nonconventional yeast that can accumulate lipids up to 20–50% of its dry cell weight depending on culture conditions.[1,2] *Y. lipolytica* is amenable to genetic manipulations, can secret enzymes at high levels, tolerate a wide range of conditions, and utilize many different substrates. Together, this fueled a growing scientific interest in *Y. lipolytica* as an effective bio-factory for the productions of various natural products and biofuels.

Terpenoids (also called isoprenoids or terpenes) are natural hydrocarbons used as fragrances and flavoring agents and have been recently identified as effective precursors of biofuels with high energy density, high combustion heat and efficient performance under cold temperature.[3,4] The sesquiterpene compounds, which are terpenoids containing 15 carbon atoms such as farnesene and bisabolene are particularly highly effective jet fuel precursors. Farnesene has been already produced on an industrial scale by the company Amyris employing engineered yeasts fermenting sugar cane (https://farnesene.net/). Bisabolene has been synthesized by engineered *Escherichia coli* and *Saccharomyces cervisiae* strains.[3,5] It was then chemically hydrogenated into bisabolane that was shown to be an effective alternative to the D2 diesel fuel.[3] The D2 diesel is an improved grade of diesel that is used for compression ignition engines. Bisabolane showed comparable properties to the D2 diesel fuel including a similar carbon chain length, cetane number and cold properties. The presence of an organic ring also increases the energy density of bisabolane as a fuel.[3] The precusor bisabolene has also useful applications as a fragrnace, flavoring agent, anti-inflammatory and anti-cancer compound.[6,7]

More recently, *Y. lipolytica* was engineered to produce α-bisabolene from cooking waste.[8] However, this work employed a classical approach for engineering the yeast and did not make use of its ability to over-acumulate lipids. This ability was shown to increase the production of β-carotene, an important terpenoid molecule, by a *Y. lipolytica* strain engineered to overproduce lipids.[9] This suggests that the ability of *Y. lipolytica* to accumulate lipids can be harnessed for increasing the production of other terpenoids including α-bisabolene.

To this end, we sought to employ the golden gate (GG) assembly protocol to generate a multigene expression cassette aimed to produce α-bisabolene in *Y. lipolytica*. We used a GG toolbox that involves the TEF strong promoter driving the expression of two key genes in the synthesis pathway of α-bisabolene. This toolbox has proven to be an efficient, modular tool for engineering *Y. lipolytica*.[10] However, it has not been used for the production of industrial products including biofuels. We report the effectiveness of this protocol to engineer *Y. lipolytic* to produce

* Corresponding author.
E-mail address: wmel_sharoud@mans.edu.eg (W.M. El-Sharoud).

https://doi.org/10.1016/j.biotno.2022.12.005
Received 8 November 2022; Received in revised form 22 December 2022; Accepted 23 December 2022
Available online 24 December 2022
2665-9069/© 2022 The Authors. Publishing services by Elsevier B.V. on behalf of KeAi Communications Co. Ltd. This is an open access article under the CC BY-NC-ND license (http://creativecommons.org/licenses/by-nc-nd/4.0/).

α-bisabolene and could increase the production titer of this biofuel precursor by employing the ability of the yeast to over-accumulate lipids.

2. Materials and methods

2.1. Cultures and growth conditions

Cultures used in this work are described in Table 1. *Y. lipolytica* strains were grown on the YPD agar (BD Difco, Maryland, USA) at 30 °C for 24 h. The yeast nitrogen base dextrose (YNBD) minimal agar was used for the selection of *Y. lipolytica* transformants. YNBD consisted of glucose (10 g l^{-1}), yeast nitrogen base without amino acids and without ammonium sulphate (1.7 g l^{-1}), ammonium chloride (5 g l^{-1}) and phosphate buffer pH 6.8 (50 mM) [10]. YNBD was used for the selection of the transformed *Y. lipolytica* JMY1212 cells (Bis1212), whereas YNBD + hygromycin (200 μg ml^{-1}) were used for the selection of the transformants resulting from the JMY 3501 strain (Bis3501). *Escherichia coli* DHα5 was grown LB agar (BD Difco) at 37 °C for 24 h. For the selection of antibiotic-resistant *E. coli* transformants, ampicillin (100 μg ml^{-1}) or kanamycin (50 μg ml^{-1}) (Sigma-Aldrich, St. Louis, Missouri, USA) was added to the LB agar as relevant.

2.2. Golden Gate assembly

Golden gate (GG) assembly was conducted using the modular GG toolbox described by Larroude et al.[10] Plasmids pre-cloned with gene promoters and terminators were mixed with other plasmids containing the coding domain sequence (CDS) of a truncated 3-hydroxy-3-methyl--glutaryle coenzyme A reductase (tHMG) and α-bisabolene synthase (BiS) genes and the backbone vector GGE114. A reaction mixture of a total volume of 25 μl were formulated using 50 fmol or 75 ng of each plasmid. BsaI (1 μl), T4 ligase (1 μl), T4 ligase buffer (2 μl) and nuclease-free water (NFW) (to a final volume of 25 μl) were then added. Those enzymes, buffer and NFW were all supplied by New England Biolabs (Hitchin, Hertfordshire, UK). The GG reaction mixture was subjected to a thermal program consisting of 50 cycles of heating at 37 °C for 5 min followed by 16 °C for 5 min and 1 cycle of heating at 37 °C for 10 min followed by 60 °C for 5 min. A final cooling step at 4 °C was conducted overnight. GG reactions were conducted by using a PCR thermal cycler (Veriti, Applied Biosystems, USA).

The components of the GG toolkit were kindly provided by Prof. Tristan Rossignol of INRA, France. The CDS of *tHMG*[9] and *Bis* from *Abies grandis*[3,11] were codon optimized and designed as to contain relevant BsaI restriction sites and 4 nucleotides at each end for the golden gate assembly.[10] They were finally synthesized and supplied pre-cloned into plasmids by TWIST Bioscience (California, USA). The sequence of parts of the GG toolkit can be retrieved on https://www.addgene.org/kits/rossignol-yarrowia-lipolytica-golden-gate/#protocols-and-resources. Whereas, sequences of the edited *tHMG* and *Bis* genes are depicted in Figs. S1 and S2. Restriction enzymes were supplied by New England Biolabs (Hitchin, UK).

Table 1
Microbial strains used in the study.

Strain	Genotype	Phenotype	Source
Y. lipolytica JMY1212	*MATA ura3-302 leu2-270-LEU2-zeta xpr2-322 Δlip2 Δlip7Δ lip8*	Leu+, Ura-	Tristan Rossignol's lab, INRA
Y. lipolytica JMY3501	*Δpox1-6 Δtgl4 pTEF-DGA2-LEU2ex pTEF-GPD1-URA3ex*	Lipid overaccumulating	Tristan Rossignol's lab, INRA
Y. lipolytica Bis1212	JMY1212 strain transformed with *pTEF-tHMG-pTEF-Bis* construct	α-bisabolene producing, Leu+, Ura+	This study
Y. lipolytica Bis3501	JMY3501 strain transformed with *hygro- pTEF-tHMG-pTEF-Bis*	Lipid overaccumulating, α-bisabolene producing, Hygromycin resistant	This study
Escherichia coli DHα5	Φ80dlacZΔm15, recA1, endA1, gyrA96, thi-1, hsdR17 (rk-, mk+), supE44, relA1, deoR, Δ(lacZYAargF) U169	Chemically competent strain	Jose Jimenez's lab, Imperial College London.

2.3. Assessment of DNA concentration

DNA concentration was measured by using the Qubit 4 fluoremeter (ThermoFisher Scientific, Waltham, Massachusetts, USA) and the Qubit™ 1X dsDNA BR Assay kit (ThermoFisher Scientific).

2.4. Transformation of Y. lipolytica with GG genetic constructs

The product of the GG reactions described above was used to transform *E. coli* DHα5 by the use of the heat shock method.[12] White *E. coli* colonies were selected as successful transformants (Fig. S3) and used for plasmid extraction employing the QIAprep spin miniprep kit (Qiagen, MD, USA). Plasmid preparation was then digested by the Not1 restriction enzyme and the product was used to transform *Y. lipolytica* using the lithium acetate, one-step transformation method.[13,14] Transformants were selected on the YNBD minimal agar as described above. They were then confirmed using PCR and DNA sequencing.

2.5. Assessment of the production of α-bisabolene using the GC-FID protocol

Two sets of experimental conditions were used for the production of α-bisabolene from transformed *Y. lipolytica*. In both cases, a 24 h culture of the transformant *Y. lipolytica* strains grown in YPD broth was inoculated as to obtain OD600 of 0.1 in YP broth supplemented with 80 g L^{-1} glucose. Two volumes of YP broth were used; 2 ml in glass tubes and 50 ml in shake flasks (250 ml). Dodecane (Sigma) was added (10% v/v) as an overlay on each volume of the YP broth. The 2 ml cultures were incubated at 30 °C for 72 h with shaking at 120 rpm,[15] whereas the 50 ml cultures were incubated at the same temperature for 120 h with shaking at 200 rpm. The dodecane overlayer was separated by centrifugation at 5000×*g* for 5 min. The overlayer was then subjected to the GC-FID analysis using an MXT-1 Restek column (60 m, 053 mm ID, 5 μm film) and a GC system SRI-8610C (SRI Instruments, California, USA). The oven temperature for the column was kept at 35 °C for 3 min, followed by an increase to 240 °C (5 °C per min), and 300 °C (10 °C per min), at which the temperature was maintained for 70 min.

3. Results

3.1. Engineering of Y. lipolytica to produce α-bisabolene

Yeasts can be engineered to produce bisabolene via the mevalonate pathway (MEVP) following transformation with a relevant synthase enzyme. As shown in Fig. 1, MEVP is a multi-step pathway that produces FPP, which can be converted into bisabolene by a bisabolene synthase (Bis) enzyme. It has been shown that the overexpression of a truncated version of the HMG gene (tHMG) resulted in an overproduction of FPP in *Saccharomyces cervisiae* and *Y. lipolytica*.[16,17] We thus designed a genetic construct using the golden gate toolkit, for the overexpression of both the *tHMG* and *Bis* genes by placing them under the control of the strong TEF promoter (Fig. 2A).

This generated a GG genetic construct that was used to transform *Y. lipolytica* JMY 1212. Transformants were subjected to the GC-FID analysis. A well-separated peak with a retention time of approximately 11 min could be recognized in the GC-FID pattern of the transformed

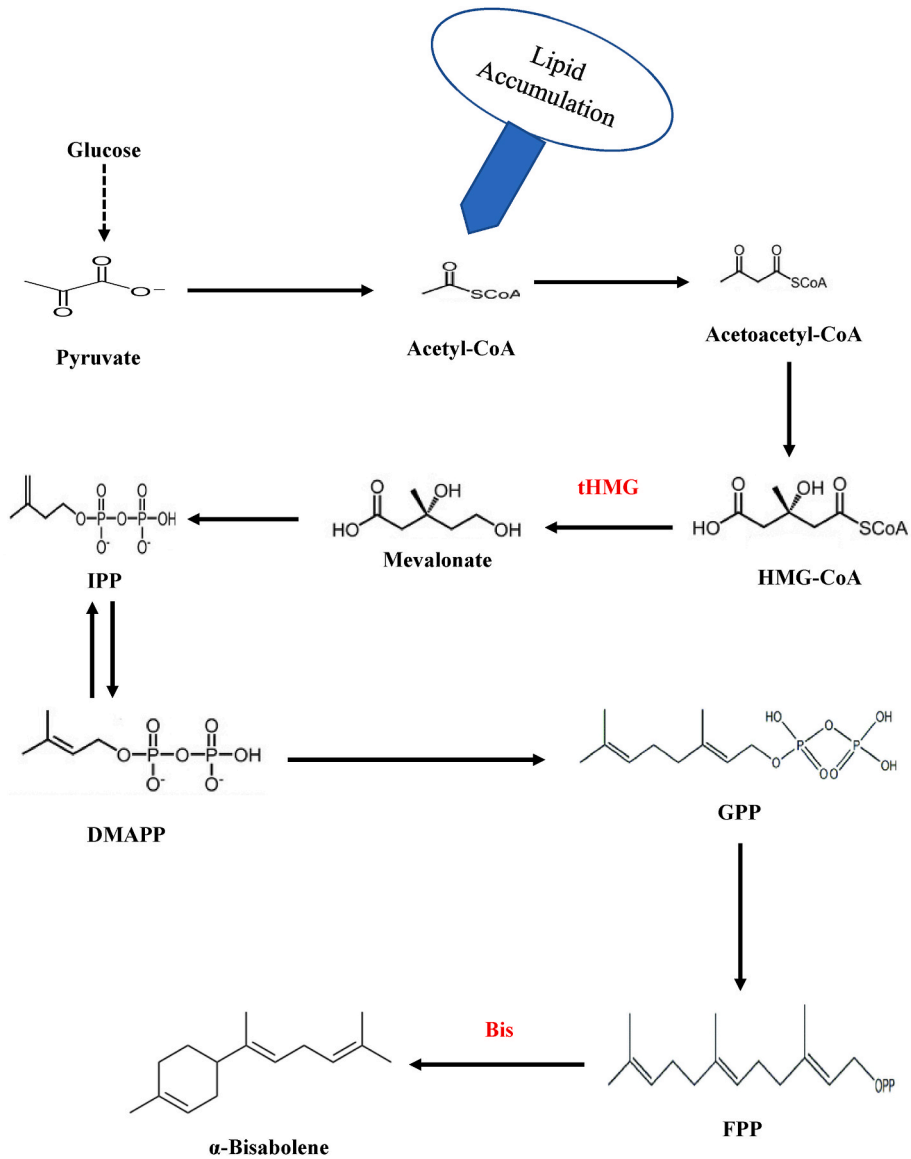

Fig. 1. A simplified illustration of the mevalonate pathway leading to the production of bisabolene in yeasts [3]. HMG-CoA: hydroxymethylglutaryl-CoA, HMG: HMG-reducatase, IPP: isopentenyl diphosphate, DMAPP: dimethylallyl diphosphate, GPP: geranyl/farnesyl diphosphate, FPP: farnesyl diphosphate, BiS: α-bisabolene synthase. Dashed arrow indicates multi-step reaction.

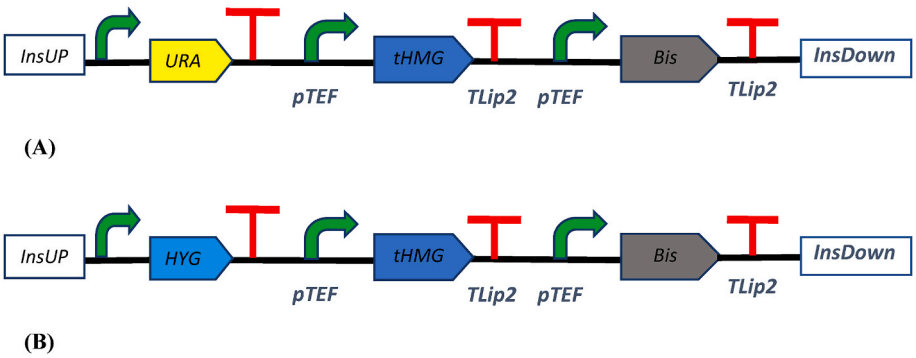

Fig. 2. Genetic constructs synthesized using the GG toolkit for overexpressing α-bisabolene in *Y. lipolytica*. Each construct involved CDS of the tHMG and Bis genes, which were lined to p*TEF* promoter and T*Lip2* terminators. The construct also contained a Uracil (Ura) (A) or hygromycin resistant (hyg) (B) marker and Zeta elements (InsUp and InsDown) sequences for integrating the construct into the cell's chromosome.

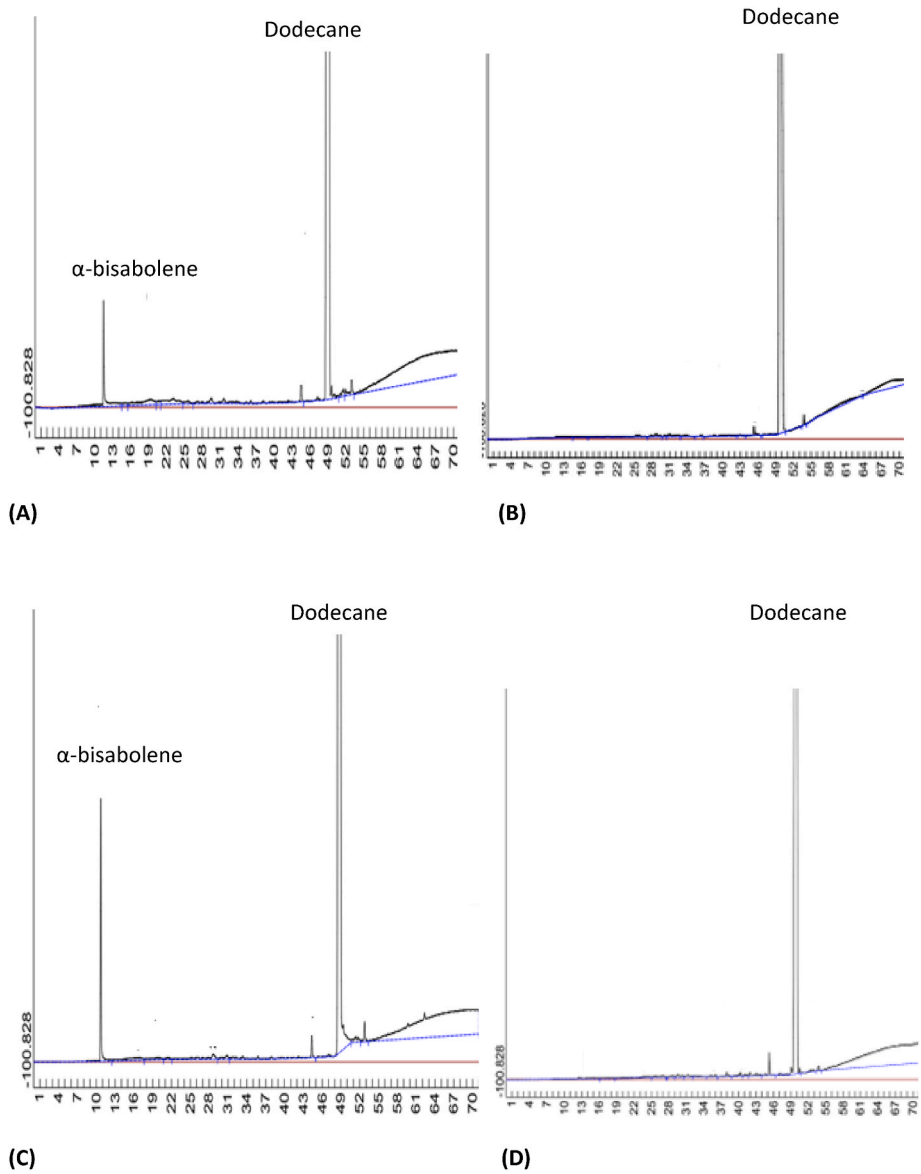

Fig. 3. GC-FID chromatograms of α-bisabolene-producing *Y. lipolytica* Bis1212 (A) and Bis3501 (C) and un-transformed *Y. lipolytica* JMY1212 (B) and JMY3501 (D).

Y. lipolytica (designated Bis1212) strain (Fig. 3A). This peak was absent in the GC-FID pattern of the parent, non-transformed *Y. lipolytica* JMY1212 (Fig. 3B), which indicated that it presented α-bisabolene. This suggested that the transformed *Y. lipolytica* Bis1212 strain was able to produce α-bisabolene.

The production of α-bisabolene by the transformed *Y. lipolytica* Bis1212 strain was quantified. The production titer was found to be significantly influenced by the culture conditions. As shown in Table 2, growing the Bis1212 strain using 50 ml culture with shaking at 200 rpm for 120 h was associated with more than 2-time increase (1150 mg l^{-1}) in the amount of α-bisabolene as compared to the use of 2 ml culture with shaking at 120 rpm for 72 h (489 mg l^{-1}).

Table 2
Production of α-bisabolene by transformed *Y. lipolytica* 1212 and JMY3501 strains.

Strain	Production of α-bisabolene as mg l^{-1} caryophyllene[a] ± Standard deviation	
	2 ml/120 rpm/72 h	50 ml/200 rpm/120 h
Y. lipolytica Bis1212	489 ± 21	1150 ± 50
Y. lipolytica Bis3501	816 ± 15	1243 ± 45

[a] Caryophyllene was used as a standard in the GC-FID analysis.

3.2. *Effect of lipid-overaccumulation by Y. lipolytica on increasing α-bisabolene production*

To study the effect of lipid-overaccumulation by *Y. lipolytica* on α-bisabolene production, *Y. lipolytica* JMY3501, a lipid over-accumulating strain,[18] was transformed with a GG genetic construct involving a *tHMG* and *Bis* synthase genes under the control of the TEF promoter. Since the JMY3501 strain did not contain antibiotic or nutritional (Ura or Leu) selection makers, the genetic construct was built with a hygromycin resistant gene (Fig. 2B). The production of α-bisabolene by the transformed *Y. lipolytica* strain designated Bis3501 was indicated by the appearance of a well-separated peak with a retention time of approximately 11 min in the GC-FID pattern of this strain (Fig. 3C). This peak was absent in the chromatogram of the parent, un-transformed JMY3501 strain (Fig. 3D).

Table 2 compares α-bisabolene production by a transformed *Y. lipolytica* JMY1212 strain (Bis1212) with that of a transformed JMY3501 strain (designated Bis3501). It could be seen that the

expression of α-bisabolene in the Bis3501 strain (816 mg l^{-1}) was approximately 1.7-times that of the transformed Bis1212 strain (489 mg l^{-1}) under the 2 ml/120 rpm/72 h production conditions. This was increased to the highest titer of 1243 mg l^{-1} with the use of 50 ml/200 rpm/120 h. This suggests that lipid overaccumulation allowed higher production of α-bisabolene. It also confirms that the use of 50 ml culture in 250 ml shake flask agitated at 200 rpm for 120 h increased the production titer.

4. Discussion

The current study created two *Y. lipolytica* strains, Bis1212 and Bis3501, engineered for the production of α-bisabolene, a sesquiterpene of various industrial and medical applications and a precursor of an advanced biofuel. The observed production titers of α-bisabolene by those strains, 1150 mg l^{-1} and 1243 mg l^{-1}, respectively, are higher than those reported for engineered *Saccharomyces cervisiae* (994 mg l^{-1})[3] and previously engineered *Y. lipolytica* (973.1 mg l^{-1}).[8] Another recent study also reported the production of 1058.1 mg l^{-1} of α-bisabolene by engineered *Y. lipolytica*,[19] which was still lower than the production titers observed in the present study. This could be attributed to the use of the strong TEF promoter in overexpressing the *tHMG* and *Bis* genes. The use of strong promoters was previously shown to increase the transcription rate by 6 times, compared with a 2 time increase with cloning cells with an additional gene copy.[20] The TEF promoter is reported to be one of the strongest promoters for initiating gene expression in *Y. lipolytica*.[20]

Another reason for the present higher production titer of α-bisabolene is the use of a lipid overaccumulating *Y. lipolytica* strain. We engineered the lipid-overaccumulating JMY3501 strain that was deleted in the triglyceride lipase gene y1TGL4 and the beta-oxidation genes ylPOX1-6[21] and overexpressed in the major acyl-CoA: diacylglycerol acyltransferase (ylDGA2) gene[22] and the glycerol-3-phosphate dehydrogenase (ylGPD1) gene.[23] Transforming this strain with the *tHMG* and *Bis* genes resulted in approximately 1.7 time increase in α-bisabolene production compared to the JMY1212 strain that had lower lipid overaccumulation capacity. In consistent with this, a previous report showed that lipid overaccumulation was associated with an increased production of β-carotene in *Y. lipolytica*.[9] This was ascribed to the production of higher concentrations of Acetyl Co-A in lipid overproducing *Y. lipolytica* strains. Abundance of Acetyl Co-A could increase the production of α-bisabolene and β-carotene since it is a precursor in the MEVP (Fig. 1). Accumulation of lipids also increases the storage of those terpenoids inside the lipids bodies, which could reduce the toxicity associated with their accumulation in the plasma membrane.

The golden gate assembly protocol applied in this work has facilitated and modulated the design and assembly of the genetic constructs leading to α-bisabolene overexpression. The GG toolkit also offers strong promoters and terminators for highly efficient gene expression. It employs Zeta elements for integrating the transformed genes into the yeast's chromosomes, which allows genetic stability and persistent production of α-bisabolene.

The *Y. lipolytica* strains engineered in the present study for the overexpression of α-bisabolene could be further exploited in the valorization of different wastes including waste oils and lignocellulosic plant wastes. As an oleaginous yeast, *Y. lipolytica* can produce and metabolize lipids, which allows the conversion of waste oils into α-bisabolene by the engineered strains. To use lignocellulosic materials, the engineered strains will be further transformed with cellulolytic genes to degrade polysaccharides into fermentable sugars that can be used for the production of α-bisabolene. Conferring cellulolytic ability to *Y. lipolytica* to metabolize cellulose in a consolidated bioprocessing, where the yeast can both degrade polysaccharides and ferment the product has been reported in the literature.[24]

CRediT authorship contribution statement

Walid El-Sharoud, Leonardo Rios-Solis and Rodrigo Ledesma-Amaro perceived and designed the study. **Walid El-Sharoud** and **Samar Zalma** conducted the laboratory experiments. **Walid El-Sharoud** wrote the manuscript. All authors contributed comments and revisions to the article.

Declaration of competing interest

The authors declare no conflict of interest. Rodrigo Ledesma-Amaro is an Editorial Board Member for *Biotechnology Notes* and was not involved in the editorial review or the decision to publish this article.

Acknowledgements

This paper is based upon work supported by Science, Technology & Innovation Funding Authority (STDF) under grant no. 42792 and the British Council grant 527429894. The authors are grateful to Dr. Tristan Rossignol (INRA, France) for his generous gift of the GG toolbox plasmids and *Y. lipolytica* strains. Many thanks to Dr. Macarena Larroude for her technical guidance on the use of the GG toolbox.

Appendix A. Supplementary data

Supplementary data to this article can be found online at https://doi.org/10.1016/j.biotno.2022.12.005.

References

1 Blazeck J, Hill A, Liu L, et al. Harnessing *Yarrowia lipolytica* lipogenesis to create a platform for lipid and biofuel production. *Nat Commun.* 2014;5. https://doi.org/10.1038/ncomms4131.
2 Groenewald M, Boekhout T, Neuveglise C, Gaillardin C, van Dijck PW, Wyss M. *Yarrowia lipolytica*: safety assessment of an oleaginous yeast with a great industrial potential. *Crit Rev Microbiol.* 2014;40:187–206.
3 Peralta-Yahya PP, Ouellet M, Chan R, Mukhopadhyay A, Keasling JD, Lee TS. Identification and microbial production of a terpene-based advanced biofuel. *Nat Commun.* 2011;27. https://doi.org/10.1038/ncomms1494.
4 Liu CL, Tian T, Alonso-Gutierrez J, et al. Renewable production of high density jet fuel precursor sesquiterpenes from *Escherichia coli*. *Biotechnol Biofuels.* 2018;11. https://doi.org/10.1186/s13068-018-1272-z.
5 Kim EM, Woo HM, Tian T, et al. Autonomous control of metabolic state by a quorum sensing (QS)-mediated regulator for bisabolene production in engineered *E. coli*. *Metab Eng.* 2017;44:325–336.
6 Jou YJ, Hua CH, Lin CS, et al. Anticancer activity of γ-Bisabolene in human neuroblastoma cells via induction of p53-mediated mitochondrial apoptosis. *Molecules.* 2016;21. https://doi.org/10.3390/molecules21050601.
7 Wang C, Zada B, Wei G, Kim SW. Metabolic engineering and synthetic biology approaches driving isoprenoid production in *Escherichia coli*. *Bioresour Technol.* 2017;241:430–438.
8 Zhao Y, Zhu K, Li J, et al. High-efficiency production of bisabolene from waste cooking oil by metabolically engineered *Yarrowia lipolytica*. *Microb Biotechnol.* 2021;14:2497–2513.
9 Larroude M, Celinska E, Back A, Thomas S, Nicaud JM, Ledesma-Amaro R. A synthetic biology approach to transform *Yarrowia lipolytica* into a competitive biotechnological producer of β-carotene. *Biotechnol Bioeng.* 2018;115:464–472.
10 Larroude M, Park YK, Soudier P, Kubiak M, Nicaud JM, Rossignol T. A modular Golden Gate toolkit for *Yarrowia lipolytica* synthetic biology. *Microb Biotechnol.* 2019;12:1249–1259.
11 Bohlmann J, Crock J, Jetter R, Croteau R. Terpenoid-based defenses in conifers: cDNA cloning, characterization, and functional expression of wound-inducible (E)-alpha-bisabolene synthase from grand fir (*Abies grandis*). *Proc Natl Acad Sci U S A.* 1998;95:6756–6761.
12 Liljeruhm J, Gullberg E, Forster AC. *Synthetic Biology: A Lab Manual.* UK: World Scientific Publishing Co; 2014.
13 Chen DC, Beckerich JM, Gaillardin C. One-step transformation of the dimorphic yeast *Yarrowia lipolytica*. *Appl Microbiol Biotechnol.* 1997;48:232–235.
14 Holkenbrink C, Dam MI, Kildegaard KR, et al. EasyCloneYALI: CRISPR/Cas9-Based synthetic toolbox for engineering of the yeast *Yarrowia lipolytica*. *Biotechnol J.* 2018;13. https://doi.org/10.1002/biot.201700543.
15 Arnesen JA, Kildegaard KR, Cernuda Pastor M, Jayachandran S, Kristensen M, Borodina I. *Yarrowia lipolytica* strains engineered for the production of terpenoids. *Front Bioeng Biotechnol.* 2020;8. https://doi.org/10.3389/fbioe.2020.00945.
16 Ro DK, Paradise EM, Ouellet M, et al. Production of the antimalarial drug precursor artemisinic acid in engineered yeast. *Nature.* 2006;440:940–943.

17 Verwaal R, Wang J, Meijnen JP, et al. High-level production of beta-carotene in *Saccharomyces cerevisiae* by successive transformation with carotenogenic genes from Xanthophyllomyces dendrorhous. *Appl Environ Microbiol*. 2007;73:4342–4350.
18 Lazar Z, Dulermo T, Neuvéglise C, Crutz-Le Coq AM, Nicaud JM. Hexokinase–A limiting factor in lipid production from fructose in *Yarrowia lipolytica*. *Metab Eng*. 2014;26:89–99.
19 Zhu K, Zhao B, Zhang Y, et al. Mitochondrial engineering of *Yarrowia lipolytica* for sustainable production of α-Bisabolene from waste cooking oil. *ACS Sustainable Chem Eng*. 2022;10:9644–9653.
20 Dulermo R, Brunel F, Dulermo T, et al. Using a vector pool containing variable-strength promoters to optimize protein production in *Yarrowia lipolytica*. *Microb Cell Factories*. 2017;16. https://doi.org/10.1186/s12934-017-0647-3.
21 Dulermo T, Tréton B, Beopoulos A, Kabran Gnankon AP, Haddouche R, Nicaud JM. Characterization of the two intracellular lipases of *Y. lipolytica* encoded by TGL3 and TGL4 genes: new insights into the role of intracellular lipases and lipid body organisation. *Biochim Biophys Acta*. 2013;1831:1486–1495.
22 Beopoulos A, Haddouche R, Kabran P, Dulermo T, Chardot T, Nicaud JM. Identification and characterization of DGA2, an acyltransferase of the DGAT1 acyl-CoA:diacylglycerol acyltransferase family in the oleaginous yeast *Yarrowia lipolytica*. New insights into the storage lipid metabolism of oleaginous yeasts. *Appl Microbiol Biotechnol*. 2012;93:1523–1537.
23 Dulermo T, Nicaud JM. Involvement of the G3P shuttle and β-oxidation pathway in the control of TAG synthesis and lipid accumulation in *Yarrowia lipolytica*. *Metab Eng*. 2011;13:482–491.
24 Guo ZP, Duquesne S, Bozonnet S, et al. Conferring cellulose-degrading ability to *Yarrowia lipolytica* to facilitate a consolidated bioprocessing approach. *Biotechnol Biofuels*. 2017 19;10:132. https://doi.org/10.1186/s13068-017-0819-8.