Please cite this article in press as: Lee et al., Photonic hybrid quantum computing, Newton (2025), https://doi.org/10.1016/j.newton.2025.100359

Newton

CellPress
OPEN ACCESS

Review

Photonic hybrid quantum computing

Jaehak Lee,[1,2] Srikrishna Omkar,[3] Yong Siah Teo,[3] Seok-Hyung Lee,[4,5] Hyukjoon Kwon,[6] M.S. Kim,[6,7,*] and Hyunseok Jeong[3,*]

[1]Center for Quantum Technology, Korea Institute of Science and Technology (KIST), Seoul 02792, Korea
[2]Division of Quantum Information, KIST School, Korea University of Science and Technology (UST), Seoul 02792, Korea
[3]NextQuantum Innovation Research Center, Department of Physics and Astronomy, Seoul National University, Seoul 08826, Korea
[4]Department of Quantum Information Engineering, Sungkyunkwan University, Suwon 16419, Korea
[5]Centre for Engineered Quantum Systems, School of Physics, The University of Sydney, Sydney, NSW 2006, Australia
[6]Korea Institute for Advanced Study, Seoul 02455, Korea
[7]Blackett Laboratory, Imperial College London, London SW7 2AZ, UK
*Correspondence: m.kim@imperial.ac.uk (M.S.K.), jeongh@snu.ac.kr (H.J.)
https://doi.org/10.1016/j.newton.2025.100359

ACCESSIBLE OVERVIEW Photons are attractive carriers of quantum information: they travel at the speed of light, barely decohere, and can be handled without cryogenics. Yet, their interactions are so weak that scaling up photonic quantum computers remains challenging. This review explains how "hybrid" photonic encodings, where each logical qubit is an entangled combination of a single photon and a bosonic mode, such as a coherentstate qubit, can overcome this bottleneck. Three main photonic paradigms are surveyed: discretevariable schemes using single photons and linear optics, continuousvariable schemes based on squeezedlight cluster states, and bosonic codes such as the cat, binomial, and Gottesman-Kitaev-Preskill (GKP) encodings. Each offers either good robustness or good gate determinism but not both simultaneously.
Hybrid qubits inherit the orthogonality and low loss sensitivity of single-photon encodings, together with the almost deterministic Bellstate measurements available for cat states. This enables "ballistic" measurement-based architectures in which most operations are passive, with little feedforward. By comparing several concrete fault-tolerant schemes, the review shows that hybrid architectures can tolerate photonloss rates at the percentage level per mode while using significantly fewer optical resource states than leading discrete or bosonic approaches. Crucially, the key ingredients—hybrid entangled pairs and qubit converters between singlephoton and coherentstate qubits—have already been demonstrated in tabletop experiments and may be distributed over long distances in hybrid quantumnetwork protocols. The review therefore positions hybrid photonic quantum computing not as a distant ideal but as a feasible route toward scalable, network-ready quantum processors built from light.

SUMMARY

Photons are a ubiquitous carrier of quantum information: they are fast, suffer minimal decoherence, and do not require huge cryogenic facilities. Nevertheless, their intrinsically weak photon-photon interactions remain a key obstacle to scalable quantum computing. This review surveys hybrid photonic quantum computing, which exploits multiple photonic degrees of freedom to combine the complementary strengths of discrete and bosonic encodings, thereby significantly mitigating the challenge of weak photon-photon interactions. We first outline the basic principles of discrete-variable, native continuous-variable, and bosonic-encoding paradigms. We then summarize recent theoretical advances and state-of-the-art experimental demonstrations with a particular emphasis on the hybrid approach. Its unique advantages, such as efficient generation of resource states and nearly ballistic (active-feedforward-free) operations, are highlighted alongside the remaining technical challenges. To facilitate a clear comparison, we explicitly present the error thresholds and resource overheads required for fault-tolerant quantum computing. Our work offers a focused overview that clarifies how the hybrid approach enables scalable and compatible architectures for quantum computing.

This is an open access article under the CC BY-NC license (http://creativecommons.org/licenses/by-nc/4.0/).

Please cite this article in press as: Lee et al., Photonic hybrid quantum computing, Newton (2025), https://doi.org/10.1016/j.newton.2025.100359

INTRODUCTION

Quantum computing has made remarkable progress across various physical platforms. Recent advances in superconducting circuits, ion traps, and neutral atoms have significantly improved the accuracy of gate operations.[1–3] However, it is widely anticipated that these platforms will face limitations when it comes to scaling the number of qubits to the level required for fault-tolerant quantum computing (FTQC). There is still a huge effort required to precisely prepare, control, and measure a large quantum system at a fast gate speed. In fact, the number of controllable qubits required for FTQC with quantum error correction (QEC) is generally expected to be orders of magnitude greater than what is reachable in the foreseeable future. One possible route to overcome some of these limitations is through hybrid computing with photonic qubits, which offer fast operation and low decoherence.

Photonic quantum computing based on discrete variables (DVs) typically relies on single-photon qubits and linear optical elements.[4,5] A major challenge has been the inherently nondeterministic nature of this approach.[6,7] Various efforts have been made to address this issue using prearranged offline entangled states.[8,9] Recent theoretical progress has significantly improved the loss thresholds for single-photon-based quantum computing.[10–14] However, practical implementation still remains highly challenging due to the large number of physical qubits required for error correction or the continual need for active feedforward operations during gate operations.

Continuous-variable (CV) quantum computing exploits the continuous degrees of freedom of the infinite-dimensional Hilbert space.[15–19] It utilizes CVs as information carriers, called qumodes, instead of discrete qubits or qudits. However, while finite universal sets of CV gates are known, a complete fault-tolerant model for quantum computing based solely on universal CV gates remains to be established.[20]

A bosonic qubit is a logical two-level quantum system encoded within the infinite-dimensional Hilbert space of a single bosonic mode.[21] It is constructed by selecting two (approximately) orthogonal states that serve as the logical basis. An example of such a scenario is the Gottesman-Kitaev-Preskill (GKP) states.[22] Quantum computing based on the GKP states[22] has attracted considerable attention because of its potential for relatively efficient error correction. The main difficulty, however, lies in the fact that generating high-quality photonic GKP states efficiently is extremely challenging, and no suitable method has yet been firmly established. The binomial code utilizes superpositions of Fock states with carefully designed binomial coefficients to protect against specific errors.[23] While it offers a robust structure for error correction against photon loss and dephasing using orthogonal superpositions of finite Fock states, the high complexity of resource state preparation and sensitivity to realistic, compounded noise limit its practical scalability.[21]

Another bosonic qubit is a superposition of two coherent states, commonly referred to as a cat state,[24–26] based on which all-optical quantum computing schemes were suggested.[25,26] Cat-state qubits offer distinct advantages in the context of all-optical implementations. They enable a nearly deterministic Bell-state measurement (BSM) using a simple optical setup consisting of a beam splitter and two photodetectors[27,28]—a feat not achievable with single-photon qubits. This simplicity facilitates highly efficient gate operations, significantly enhancing resource efficiency.[29] Furthermore, several methods for generating cat states have been suggested and experimentally demonstrated.[30,31] Nonetheless, cat-state qubits are composed of coherent states that are inherently non-orthogonal, which makes certain single-qubit operations difficult unless sufficiently large cat states are available. Additionally, due to their intrinsic property of having undefined photon numbers, cat states tend to be relatively vulnerable to photon loss.

There have been efforts to develop more powerful schemes for quantum computing by hybridization of different types of approaches.[32] Photonic hybrid quantum computing, where a logical qubit is an entangled combination of a single-photon part and a coherent-state part,[33–36] combines the strengths of the above methods in a highly synergistic way. Unlike GKP states, hybrid entangled states can be generated more efficiently,[37,38] and experimental demonstrations have already been reported.[37–42] Like cat-state-based approaches, hybrid methods allow for deterministic BSMs.[33] Furthermore, the DV component of the hybrid qubit provides an orthogonal basis regardless of the amplitude of the coherent-state part, which is distinct from a typical cat-state qubit. As a result, hybrid architectures can simultaneously achieve a reasonably high level of fault tolerance and resource efficiency while operating in an almost entirely ballistic manner that avoids most active feedforward processes. These features make hybrid photonic quantum computing a highly promising and competitive platform in the long-term pursuit of scalable quantum computing technologies. In this topical review, we report on the recent progress and future prospects of the hybrid methods for photonic quantum computing.

This paper is structured as follows. First, we review DV and CV approaches, highlighting their respective advantages and limitations. Subsequently, we discuss the bosonic qubit approach, focusing on quantum computing using cat states and bosonic error correction codes. We then introduce the hybrid approach, covering the analysis of FTQC and its applications to hybrid quantum networks. Recent progress in generating hybrid resource states is also presented. We conclude with final remarks and future prospects.

DISCRETE-VARIABLE APPROACH

Knill, Laflamme, and Milburn (KLM) proposed a protocol for scalable linear optical quantum computing (LOQC) using only linear optical elements, single-photon sources, and photon-counting detectors.[4] In this framework, qubits are defined via dual-rail encoding,[5] where logical states $|0\rangle$ and $|1\rangle$ correspond to a single photon occupying one of two orthogonal modes (e.g., two distinct polarizations or spatial paths). The KLM protocol leverages measurement-induced nonlinearities to implement nondeterministic entangling gates via teleportation and post-selection,[8] overcoming a fundamental challenge in photonic quantum computing, that is, the absence of strong interactions between photons.

As used in the KLM protocol, teleportation is a key technique for addressing the non-determinism of entangling gates, as it

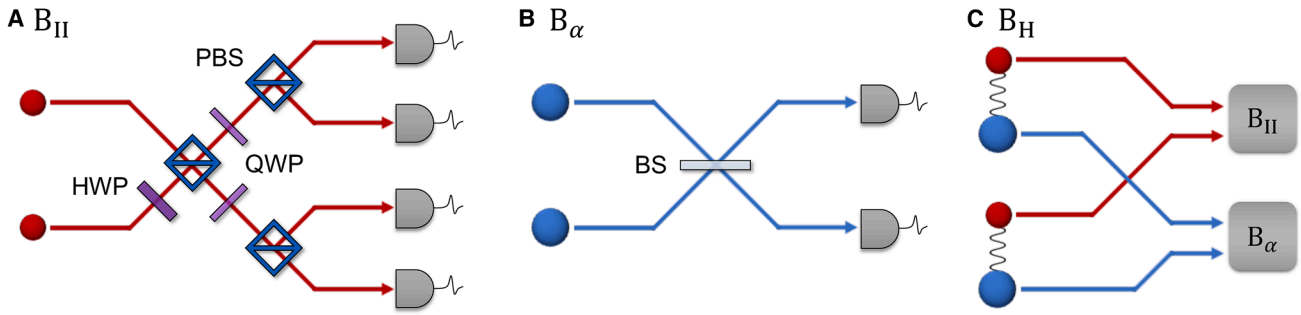

Figure 1. BSM schemes for three types of encoding

(A) DV BSM, B_{II}, consisting of polarizing beam splitters (PBSs), a half waveplate (HWP), two quarter waveplates (QWPs), and four on-off detectors.

(B) BSM in coherent-state basis, B_α, implemented by a beam splitter (BS) and two PNR detectors.

(C) HBSM, B_H, realized by separately performing two BSMs, B_I and B_α. The red (blue) circles represent single-photon (cat-state) qubits. While the success probability of B_{II} is 1/2, those of B_α and B_H can be made arbitrarily high by increasing coherent amplitude α.

allows shifting a large portion of probabilistic operations into offline preparation of resource states.[8] However, consuming these states to implement entangling gates involves BSMs, which remain inherently probabilistic. Under standard LOQC settings, the success probability of a BSM cannot exceed 50% without additional resources.[6,7] A BSM scheme, also called a type II fusion operation,[43] is illustrated in Figure 1A, which can distinguish only two among the four Bell states. It is thus crucial to enhance the success probability of a BSM for the scalability of LOQC. Methods have been proposed for this purpose employing squeezing operations,[44] a pair of ancillary entangled photons,[45] or unentangled ancillary single photons,[46] reaching a success probability of 75%.[45,46] It was shown that a logical BSM can be performed with an arbitrarily high success probability of $1-2^{-N}$ using N multi-photon encoding and N physical BSMs.[47]

LOQC schemes using measurement-based nonlinearities and teleportation have further advanced through the integration of measurement-based quantum computing (MBQC),[9] a paradigm that performs computation solely by single-qubit destructive measurements on a large entangled cluster state. Given a graph G, a cluster state $|G\rangle$ is defined as a state that can be prepared by initializing each qubit to $|+\rangle$ and applying a controlled-Z (CZ) gate on each pair of qubits connected by an edge. MBQC can be viewed as an extension of quantum teleportation: input qubits that encode the initial state are first entangled with a cluster state, followed by single-qubit measurements on all qubits except a designated subset of "output qubits," which effectively teleports the original input state onto the output qubits with a feedforward operation. MBQC is equivalent to conventional circuit-based quantum computing and thus is capable of universal quantum computing.[9]

MBQC is particularly advantageous for LOQC because nondeterministic operations are, in principle, only required during the offline preparation of cluster states, while the primary computation itself relies on straightforward single-qubit measurements. Photonic cluster states can be generated using type I or II "fusion" operations, B_I or B_{II},[43] where the latter corresponds essentially to a destructive BSM. Starting with small "building-block" cluster states (e.g., three-photon Greenberger-Horne-Zeilinger [GHZ] states), one can iteratively merge them via fusions to construct the desired cluster state.

Due to the limited success probabilities of fusion operations and various noise sources, such as photon loss, robust QEC codes are essential to ensure robustness against errors. QEC codes enable arbitrarily large computation with small error rates when the physical error rates remain below a certain limit, called a noise threshold. In this context, a scheme using concatenated QEC codes and parallel fusions has demonstrated clear noise thresholds.[48] Additionally, topological QEC codes (particularly surface codes) integrated naturally into MBQC using a family of three-dimensional cluster states, called the Raussendorf-Harrington-Goyal (RHG) lattice.[49] This has been adapted to photonic qubits by incorporating fusions, demonstrating thresholds against both photon loss and computational errors.[50] Although the photon-loss thresholds obtained by initial investigations were low (~0.05%[50]), recent advances have significantly improved them to practically relevant levels up to about 10% in a more resource-efficient way than previous schemes.[10,11] These improvements utilize near-deterministic logical-level fusions with multi-photon encoding, enabling end-to-end schemes from 3-photon GHZ states to fault-tolerant MBQC.[10,11] Another possible direction is "ballistic" photonic MBQC,[51,52] which avoids post-selection by employing graph purification and thereby reduces the technical complexity associated with active switching and feedforward operations. However, its impact on error thresholds and resource requirements may vary depending on the underlying architecture.

Fusion-based quantum computing (FBQC)[12] is a variant of the LOQC framework that inverts the relationship between fusions and measurements compared to MBQC. While MBQC uses fusions to prepare large entangled resource states for subsequent single-qubit measurements, FBQC employs fusions themselves (between constant-size resource states) as the primary computational mechanism. This approach may enable more streamlined and flexible LOQC strategies by eliminating the intermediate cluster state construction step. Similar to MBQC, key challenges in FBQC include photon loss and the inherently non-deterministic nature of fusion operations, implying that many techniques developed for MBQC can be directly adapted to FBQC. For instance, encoding resource states using quantum parity codes[29,53] can lead to a photon-loss threshold exceeding

Please cite this article in press as: Lee et al., Photonic hybrid quantum computing, Newton (2025), https://doi.org/10.1016/j.newton.2025.100359

10%,[13,14] while increasingly heavy resource requirements are still an obstacle. Additionally, there are ongoing efforts to generalize FBQC by using GHZ-state measurements involving more than two qubits,[54] potentially leading to higher loss tolerance compared to standard FBQC at the cost of increased technical complexity.

CV APPROACH

CV quantum information processing exploits continuous degrees of freedom inherent in the infinite-dimensional Hilbert space of a quantum harmonic oscillator. The CV approach represents and manipulates the unit of information ("qunat") directly using physical quantities with CVs such as x and p quadratures. A significant milestone in CV quantum computation is the realization of large-scale squeezed-state cluster states, which serve as a universal resource for CV MBQC.[17] Recent experiments have demonstrated the generation of two-dimensional CV cluster states by time-domain multiplexing of squeezed states using optical delay loops followed by beamsplitter interactions.[55–58] At each time bin, a two-mode squeezed state is produced by interfering two squeezed states on a beam splitter. Two-mode squeezed states are then multiplexed using optical delay lines, effectively linking CV modes at different time bins, which in turn connect the CV modes into a two-dimensional cluster state.

A key advantage of this approach lies in the deterministic nature of Gaussian operations, described by Hamiltonians, which are second-order polynomials in quadrature operators, allowing for the scalable and efficient generation of cluster states. Nevertheless, since a circuit with Gaussian operations alone can be efficiently simulated by a classical computer,[59] non-Gaussian resources requiring third- or higher-order nonlinearity must be incorporated. It has been shown that a single non-Gaussian operation, for example, a cubic phase gate,[15] suffices to achieve universal CV quantum computation.[15] However, implementing such a gate with arbitrary nonlinearity remains technically challenging. As an alternative, by injecting non-Gaussian resource states, prepared offline, into a CV cluster state, non-Gaussian gates can be implemented via gate teleportation.[60] Another noteworthy method is to introduce a measurement-induced nonlinearity, where non-Gaussian measurements, such as photon-number-resolving (PNR) detection, provide the required non-Gaussianity and enable universal computation.[17] Despite ongoing progress,[20] a fully FTQC scheme based solely on universal CV gates has not yet been established.

BOSONIC-QUBIT APPROACH

Quantum computing using cat states

The photonic schemes for coherent-state quantum computing (CSQC) typically utilize two coherent states, $|\pm\alpha\rangle$ with amplitudes $\pm\alpha$, as the logical basis.[25,26] Their equal superpositions, $|\pm_\alpha\rangle \propto |\alpha\rangle \pm |-\alpha\rangle$, are called even and odd cat states due to their definite photon-number parities, respectively. One of the most significant advantages of CSQC, in contrast to LOQC, is the ability to perform near-deterministic BSMs.[27,28] The scheme for BSM in the coherent-state basis is presented in Figure 1B, where a 50:50 beam-splitter interaction is followed by photon-number parity measurements. After passing through the beam splitter, the four Bell states, $|\alpha\rangle_A|\alpha\rangle_B \pm |-\alpha\rangle_A|-\alpha\rangle_B$ and $|\alpha\rangle_A|-\alpha\rangle_B \pm |-\alpha\rangle_A|\alpha\rangle_B$, become $|\pm_\alpha\rangle_A|0\rangle_B$ and $|0\rangle_A|\pm_\alpha\rangle_B$ so that they can be unambiguously discriminated. The BSM fails only when both detectors click no photon, where the failure probability is determined by the overlap between two coherent states, that is, $p_f = e^{-2\alpha^2}$, and rapidly converges to 0 as α becomes large. The near-deterministic BSM enables universal quantum computing based on gate teleportation with offline resource states.[25,26] Building on this framework, Lund et al.[61] proposed an error correction scheme based on a telecorrection protocol and demonstrated the fault tolerance of CSQC, where the optimized amplitude is $\alpha \approx 1.5$. The CSQC relies on the ability to generate Schrödinger cat states, $|\pm_\alpha\rangle$, which serve as fundamental building blocks for the preparation of logical qubit states. One may also construct the logical basis using arbitrary superpositions of coherent states[24,27] or using more than two coherent-state components.[62,63]

Cat states in free-traveling fields have been experimentally generated using schemes based on conditioning measurements.[30,31,64,65] Small cat states ($\alpha \approx 1.2$) were demonstrated using single-photon subtraction,[30,64] while cat states with clear separation between the coherent states in phase space ($\alpha \approx 1.6$) were implemented using conditioning homodyne measurements[31] and multiple photon subtractions.[65] Further, the breeding protocol enhances the size of cat states by combining smaller cat states to produce larger ones,[66–68] achieving the amplitude $\alpha \approx 1.85$.

Bosonic error correction codes

Bosonic error correction codes make bosonic qubits resilient to typical errors, mainly due to photon loss. While conventional error correction codes protect logical information by distributing it across many physical qubits, it is possible to encode a logical qubit within a single harmonic oscillator by exploiting its infinite-dimensional Hilbert space. One of the well-known examples is the binomial code, which encodes qubits in superpositions of Fock states designed to detect errors expressed in terms of annihilation and creation operators.[23]

The cat code represents a logical qubit as a superposition of coherent states, with its error resilience enhanced by increasing the number of coherent-state components. The four-headed cat code employs four components of coherent states, encoding a logical qubit in even cat states,[62,63] specifically $|0_L\rangle \propto |\alpha\rangle + |-\alpha\rangle$ and $|1_L\rangle \propto |i\alpha\rangle + |-i\alpha\rangle$, as shown in Figure 2B. Within this encoding, a photon loss can be detected by the change in the photon-number parity. In practice, a nonlinear interaction is required to detect photon loss,[69,70] which remains challenging in optical systems. Recent works have proposed schemes for performing BSMs on cat-code qubits using linear optical elements and PNR detectors, which can simultaneously detect photon loss during measurements.[71,72] In addition, a linear optical scheme for generating resource states has been proposed, where a four-component cat state is created by mixing a pair of two-component cat states via a beam splitter.[73]

Please cite this article in press as: Lee et al., Photonic hybrid quantum computing, Newton (2025), https://doi.org/10.1016/j.newton.2025.100359

CellPress
OPEN ACCESS

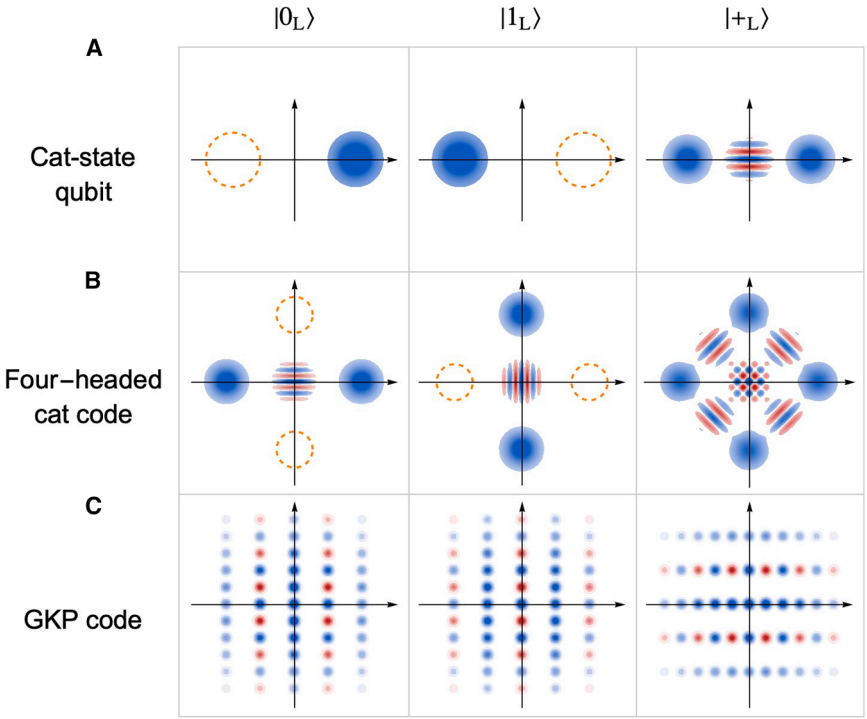

Figure 2. Wigner function for bosonic encoding schemes

Each image represents Wigner function of logical states $|0_L\rangle$, $|1_L\rangle$, and $|+_L\rangle$ for (A) cat-state qubit, (B) four-headed cat code, and (C) GKP code. Blue (red) regions represent positive (negative) Wigner functions, and orange circles show unoccupied logical space.

Another well-known bosonic error correction code is the GKP code, which encodes a logical qubit into grid-like superpositions in phase space, as shown in Figure 2C, allowing the correction of small displacement errors.[22] Due to the high error-correcting performance of the GKP code, architectures based on GKP qubits have been widely investigated toward FTQC.[74–76] Once high-quality GKP-state sources are available, a fault-tolerant architecture can be constructed efficiently using only linear optical operations and homodyne measurements,[76] and a prototype of this approach has recently been demonstrated.[77] However, a major hurdle is that the generation of the photonic GKP state is extremely challenging, as it requires strong nonlinearity. Several schemes for generating GKP states have been proposed, particularly based on the breeding protocol[78,79] and the Gaussian boson sampling (GBS) protocol.[80–82] Both protocols have recently been demonstrated in proof-of-principle experiments,[83,84] but the quality and generation rate of the produced states are still far below the requirement for large-scale FTQC.

HYBRID APPROACH

One can combine bosonic and DV qubits to take advantage of both degrees of freedom, overcoming the limitations of probabilistic entangling operations for DV qubits and the non-orthogonality of bosonic qubits. In the hybrid approach, we use two physical degrees of freedom, horizontal- and vertical-polarization states of a single photon ($|H\rangle$ and $|V\rangle$) and two coherent states ($|\pm\alpha\rangle$). We then define the logical basis of hybrid qubits as $|0_L\rangle \equiv |+\rangle|\alpha\rangle$ and $|1_L\rangle \equiv |-\rangle|-\alpha\rangle$, where $|\pm\rangle = (|H\rangle \pm |V\rangle)/\sqrt{2}$.[33] We can generalize the approach by replacing $|\pm\alpha\rangle$ with other bosonic encodings or DV mode with different degrees of freedom, offering an orthogonal hybrid basis.

Gate operations and teleportation

In order to construct a universal set of gate operations, we employ arbitrary Z rotation (Z_θ), Pauli X, Hadamard (H), and controlled-Z(CZ) gates. In the hybrid approach, it is possible to implement Z_θ and X gate operations efficiently using linear optics. An arbitrary rotation along the z axis is performed by rotating the polarization of the DV mode alone. The X gate requires flipping the polarization of the DV mode and applying a π-phase shift on the bosonic mode. For other operations, namely, H and CZ gates, we resort to gate teleportation. To implement gate teleportation, we require two essential resources: the BSM and the entangled resource state.

The hybrid BSM (HBSM) can be realized by performing two separate small BSMs, that is, B_{II} on DV qubits and B_α on bosonic qubits, respectively, as shown in Figure 1C. The HBSM fails only if both B_α and B_{II} fail, resulting in a failure probability of $P_f = \frac{1}{2}e^{-2\alpha^2}$, which is reduced by half compared to the failure probability p_f of B_α alone.[33] An advantage of gate teleportation arises from the high success rate of the HBSM. Failures in HBSMs result in logical errors, but these are exponentially suppressed by increasing the encoding amplitude α. Consequently, an FTQC architecture based on this scheme can be more resource efficient, with a smaller optical footprint due to fewer switching requirements. However, there is a major bottleneck here: under photon loss, a larger encoding amplitude leads to stronger dephasing noise, inducing logical Z errors. Therefore, it is crucial to find an optimal encoding amplitude that balances this trade-off and maximizes the fault-tolerance threshold.

Hybrid FTQC schemes

Photon loss occurs during storage, gate operations, and measurement, introducing logical errors on hybrid qubits. We characterize the total loss rate from resource state preparation to measurement by parameter η. Photon loss increases the failure probability P_f of HBSM and induces logical Z errors, which can be characterized in terms of η and α. To circumvent these errors, several QEC schemes have been investigated,[10,33–36] demonstrating that the hybrid approach can achieve FTQC with reasonable encoding amplitude α.

Please cite this article in press as: Lee et al., Photonic hybrid quantum computing, Newton (2025), https://doi.org/10.1016/j.newton.2025.100359

Table 1. List of hybrid optical QC schemes and their performance

Scheme	QEC code	Loss threshold[a] (η_{th})	Amplitude (α_{opt})	Resource cost[b] (N)
HQQC[33]	7-qubit Steane	4.6×10^{-4}	1.08	8.2×10^{9}
HTQC[34]	RHG lattice	5.07×10^{-3}	1.50	8.5×10^{5}
PHTQC-2[35]	RHG lattice	1×10^{-2}	0.84	1.1×10^{6}
PHTQC-3[35]	RHG lattice	1.14×10^{-2}	0.60	2.9×10^{7}
HCQC[36]	RHG lattice	8.9×10^{-3}	2.93	2.7×10^{4}

[a]The referenced publications follow different conventions to quote their loss thresholds. While HQQC, HTQC, and PHTQC-n refer to the loss rate of Bell-measurement outcomes, HCQC refers to the loss rate of photons. Moreover, HQQC and HCQC refer to the total loss rate, η_{th}, i.e., an effective rate that compounds loss rates of preparation (η_p), storage (η_s), gate (η_g), and measurement (η_m). Therefore, $\eta_{th} = 1 - (1 - \eta_p)(1 - \eta_s)(1 - \eta_g)(1 - \eta_m)$. On the other hand, HTQC and PHTQC-n refer to thresholds in terms of individual loss process, where $\eta_p = \eta_s = \eta_g = \eta_m$. In this table, to make a fair and consistent comparison, we have carefully re-expressed the loss thresholds η_{th} in terms of total photon-loss rate per photonic mode as well as all associated values.

[b]The resource cost N is the number of hybrid pairs required to reach a target logical error rate of $p_L \sim 10^{-6}$ when schemes operate below (about half) the thresholds.

Table 1 lists loss thresholds, optimized amplitudes, and resource costs for several hybrid FTQC schemes. The resource cost N is estimated by counting the number of unit resources (hybrid pairs $|H\rangle|\alpha\rangle+|V\rangle|-\alpha\rangle$) to achieve a logical error rate below 10^{-6}. Although a direct comparison between these schemes is not straightforward, as they employ different types of error correction strategies and notations, we have carefully re-expressed the loss thresholds to make a fair and meaningful comparison with Omkar et al.,[10,34,35] Lee and Jeong,[33] and Lee et al.[36] Each loss threshold, η_{th}, presented in the table and in the following, corresponds to a total photon loss rate per photonic mode.

The first suggestion for hybrid-qubit-based quantum computation (HQQC)[33] introduces a telecorrection-based circuit. In this scheme, the error correction protocol employs several levels of concatenation using the 7-qubit Steane code. The telecorrection circuit is composed of H, CZ, preparation of $|+\rangle_L$, and X-basis measurements. For this purpose, resource states $|\Phi_H\rangle \propto |0_L,0_L\rangle + |0_L,1_L\rangle + |1_L,0_L\rangle - |1_L,1_L\rangle$ and $|\Phi_{CZ}\rangle \propto |0_L,0_L,0_L,0_L\rangle + |0_L,0_L,1_L,1_L\rangle + |1_L,1_L,0_L,0_L\rangle - |1_L,1_L,1_L,1_L\rangle$ are prepared by merging hybrid pairs and single-photon pairs using B_I[43] and B_α.[33] Although the preparation of these resource states is non-deterministic (success probabilities of 1/4 and 1/16, respectively), it is the only non-deterministic offline process after hybrid pairs are prepared. Due to the near-deterministic nature of HBSM, the scheme already showed advantages over previous ones, such as CSQC[61] and parity-state-based LOQC,[53] in terms of both loss thresholds and resource requirements at an encoding amplitude $\alpha_{opt} \approx 1.08$ under the 7-qubit Steane code.

The performance of hybrid quantum computation can be enhanced by adopting topological QEC codes. Hybrid-qubit-based topological quantum computation (HTQC)[34] uses hybrid qubits to generate the RHG lattice.[49] The protocol begins by generating two types of 3-qubit cluster states, $|C_3\rangle \propto |0_L,0_L,0_L\rangle + |0_L,0_L,1_L\rangle + |1_L,1_L,0_L\rangle - |1_L,1_L,1_L\rangle$ and $|C_{3'}\rangle \propto |0_L,0_L,0_L\rangle + |1_L,1_L,1_L\rangle$, using B_I and B_α on hybrid pairs with a success probability of $\sim$1/2, respectively.[34] The RHG lattice is then ballistically constructed in two steps: first, 3-qubit cluster states are fused to create 5-qubit star cluster states $|C_*\rangle$, as shown in Figure 3A; these are subsequently arranged on the lattice and further fused to complete the RHG structure (see Figure 3B). The loss threshold of HTQC is $\eta_{th} \approx 5.07 \times 10^{-3}$, which is an order higher than that of HQQC, while the encoding amplitude $\alpha_{opt} \approx 1.5$ is slightly larger. HTQC achieves a substantial reduction in resource requirements by approximately four orders of magnitude compared to HQQC.

A post-selected HTQC (PHTQC-n)[35] employs a smaller encoding amplitude α to mitigate dephasing errors caused by photon loss while compensating for the resulting reduction in the BSM success probability by n repeated BSMs. This approach utilizes star cluster states with $4n$ arms, $|C_*\rangle_{4n}$, and they are fused by multiple attempts of BSMs to create entanglement along the edges of the RHG lattice. The state $|C_*\rangle_{4n}$ can be generated by merging 3-qubit cluster states, as shown in Figure 3C. Table 1 shows that PHTQC-2 and PHTQC-3 achieve the highest loss thresholds over 1%. Moreover, the optimal encoding amplitude is $\alpha_{opt} \approx 0.84$ ($\alpha_{opt} \approx 0.6$) for PHTQC-2 (PHTQC-3), clearly demonstrating the relaxed requirement for state preparation. Note that for $n > 3$, PHTQC-n does not have an advantage in reducing the resource overhead because α_{opt} becomes even smaller, making the failure probability of HBSM comparable to that of the DV scheme.[33,47]

By employing the bosonic error correction code in the bosonic encoding, the noise resilience of the hybrid qubit may be further enhanced. Recently, a hybrid-cat-code quantum computation (HCQC) scheme was proposed,[36] employing the four-headed cat code, where a qubit is defined as $a|+\rangle(|\alpha\rangle+|-\alpha\rangle)+b|-\rangle(|i\alpha\rangle+|-i\alpha\rangle)$. The BSM, on the basis of the four-headed cat code,[71,72] can distinguish all four Bell states near deterministically, even in the case of single photon loss, so that the errors due to single photon loss can be corrected. The basic building block of this scheme is a hybrid-cat pair $|H\rangle(|\alpha\rangle+|-\alpha\rangle)+|V\rangle(|i\alpha\rangle+|-i\alpha\rangle)$, which can be generated by extending the components of a cat state using the scheme of Hastrup et al.[73] with a probability of $\approx$1/8.[36] For the sake of the error-correcting capabilities of the four-headed cat code, the number of required hybrid states is significantly reduced, as seen in Table 1, at the cost of requiring a larger encoding amplitude $\alpha_{opt} \approx 2.93$.

We note that the threshold analysis in Table 1 varies by the error model employed in each scheme. In HTQC and PHTQC-n, the BSM failures correspond to missing edges that are more tolerable than Z errors in the RHG lattice.[85] Furthermore,

Please cite this article in press as: Lee et al., Photonic hybrid quantum computing, Newton (2025), https://doi.org/10.1016/j.newton.2025.100359

CellPress
OPEN ACCESS

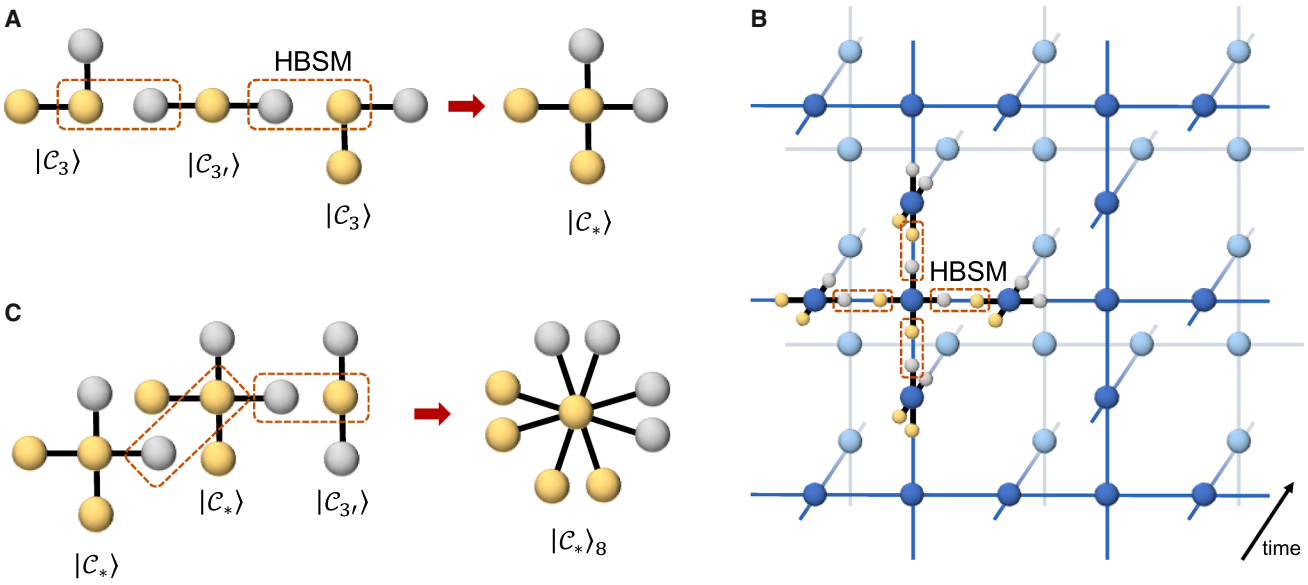

Figure 3. Major steps for hybrid quantum computing

(A) In HTQC, 3-qubit cluster states, two $|\mathcal{C}_3\rangle$ s and one $|\mathcal{C}_{3'}\rangle$, are fused using HBSMs to ballistically form $|\mathcal{C}_*\rangle$. The yellow and gray qubits represent different bases that are connected by a Hadamard gate.

(B) Physical implementations of HTQC and PHTQC-*n* require the construction of an RHG lattice. The side qubits (yellow and gray) of $|\mathcal{C}_*\rangle$ are merged by HBSM to form the edges of the RHG lattice. The central qubits colored in blue (light blue) constitute vertices of the primal (dual) layer of the RHG lattice, which provides the syndrome information needed to correct *Z*(*X*) errors.

(C) In PHTQC, two $|\mathcal{C}_*\rangle$s are fused along with a $|\mathcal{C}_{3'}\rangle$ to form a $|\mathcal{C}_*\rangle_8$, and the process can be extended to form a $|\mathcal{C}_*\rangle_{4n}$, where $n > 2$. Here, the states are post-selected over all BSMs that are successful.

HTQC employs adaptive single-qubit measurements to improve the error-correcting ability of the lattice.[85] Rather, in HCQC,[36] the ambiguity in HBSM is treated as a logical *X* error, and its propagation is thoroughly analyzed. Also, in HQQC[33] based on telecorrection, only losses in the teleported state were considered during the HBSM, assuming lossless teleportation resource states, whereas later works[34–36] consider losses in both modes of the HBSM.

The hybrid approach has strong potential to offer substantial gains in resource efficiency compared to schemes relying solely on DV or bosonic qubits. It is not straightforward to make a fair comparison among them, as they consume distinct unit resource states. However, considering the current level of experimental implementations and their relative difficulties, we count the number of hybrid pairs to estimate the overhead of the hybrid approaches, whereas the number of 3-photon GHZ states is typically counted for DV approaches.[11,14] For instance, to generate a star cluster state $|\mathcal{C}_*\rangle$, we need, on average, 24 hybrid pairs[34] in HTQC. In contrast, it requires 256 GHZ states for FBQC encoded with the (2,2)-Shor code, and it further increases to 12,928 GHZ states for the (7,4)-Shor code[14]; here, the success probability of the BSM increases at the cost of encoding complexity. Therefore, the hybrid approach is more efficient by at least an order of magnitude in terms of resource overheads, benefiting from the near-deterministic nature of the HBSM. Further, the first version of the hybrid approach, HQQC, was already shown to be more resource efficient than a representative bosonic approach, CSQC, with the improvement somewhat below an order of magnitude.[33]

Generation of hybrid entanglement

The hybrid FTQC schemes employ hybrid entangled pairs $|H\rangle|\alpha\rangle+|V\rangle|-\alpha\rangle$ as basic building blocks, and such resources are available in laboratories[37–42] (see Figure 4). A hybrid pair combining a single-rail (vacuum and single-photon) qubit and a bosonic qubit can be generated via a conditional photon addition or subtraction operation on the bosonic mode, in a manner similar to the generation of a cat state. In the scheme of Jeong et al.,[37] a photon is added via parametric downconversion either to the DV mode or to the bosonic mode, where the idler photon is detected, heralding the erasure of which-path information (see Figure 4A). On the other hand, in the scheme of Morin et al.,[38] a photon is subtracted probabilistically from the bosonic mode, and it interferes with the DV mode to herald the generation of a hybrid entangled state (see Figure 4B). For the generation of dual-rail hybrid entanglement, a heralded detection protocol was theoretically proposed in Kwon and Jeong[86] (see Figure 4C), and a different approach employing a dual-rail qubit and a bosonic qubit was experimentally realized more recently[40] (see Figure 4D). With such experimental developments, an encoding amplitude $\alpha \approx 0.9$ has been achieved,[40,42] which is almost within reach of realizing practical hybrid quantum computation. Various implementations of hybrid entangled states[37–42] offer a feasible route for employing hybrid qubits as logical qubits. This provides an advantage of the hybrid approach over other bosonic quantum computing schemes, such as GKP- and binomial-state-based ones, that require high levels of squeezing or strong nonlinear interactions.

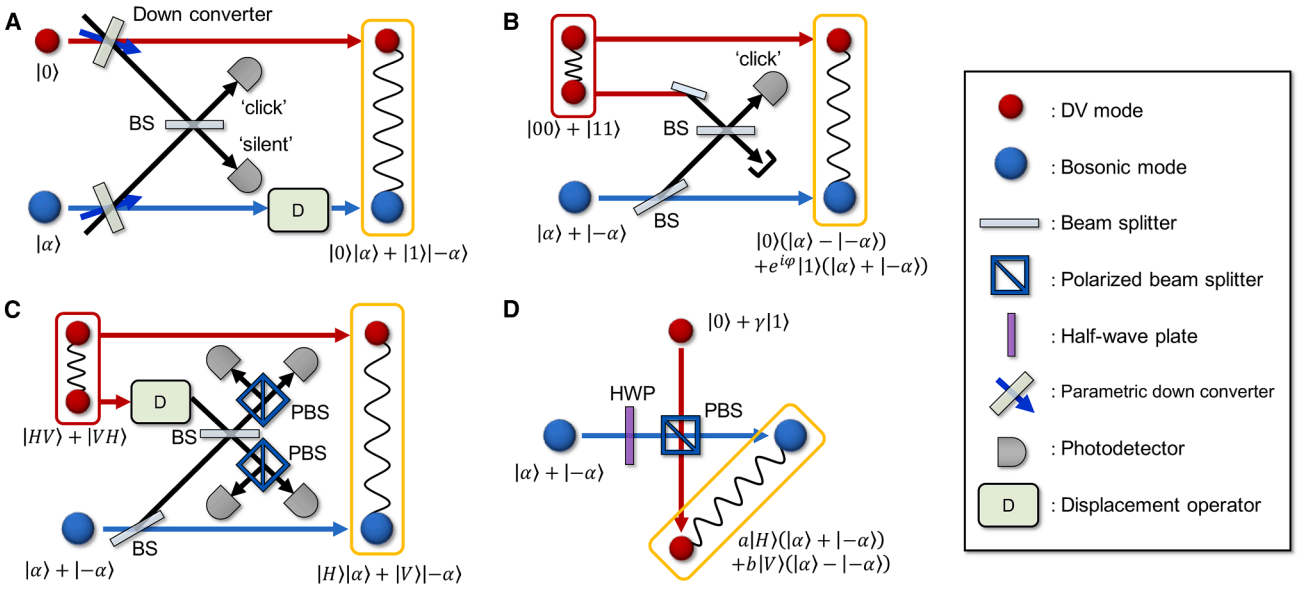

Figure 4. Schemes for generating photonic hybrid entanglement

(A and B) Single-rail hybrid entanglement is generated via (A) conditional photon addition[37] and (B) photon subtraction.[38]

(C and D) Dual-rail hybrid entanglement is generated via (C) heralded photon detection after a DV-entangled state and a cat state pass through a beam splitter[86] and (D) coherent mixing of a cat state and superposed DV modes through a polarizing beam splitter.[40]

These schemes rely on the single-photon subtraction or addition on a cat state, where the success probability is of the same order as that of the schemes for generating DV resource states (which require multi-photon coincidence detection). Once the resource states are generated at a sufficient rate, scalable construction of larger cluster states becomes available, owing to the near-deterministic nature of the HBSM, in contrast to the probabilistic Bell measurements employed in DV approaches.

HYBRID QUANTUM NETWORKS

When quantum computing is integrated with quantum networks, it can unlock the true potential of future technologies, such as the quantum internet, distributed quantum algorithms, and quantum cloud computing. There have been studies on entanglement swapping,[41,87] quantum repeaters,[41,87–90] and quantum teleportation protocols[39,40,42,91–97] in the context of photonic hybrid architectures, which will serve as bridging units that support quantum networks. Advancements in quantum-repeater primitives that directly manipulate hybrid entangled states have paved the way to the design of hybrid repeaters that can truly distribute these states. First, linear-optical-based entanglement purification of (multi-photon and/or multicoherent) hybrid entangled states that can purify bit-flip, phase-flip, and coherent-state photon-loss errors was introduced.[90] Loss-tolerant hybrid entanglement swapping was also proposed[87] (see Figure 5A). Recently, the distribution of hybrid entangled resource states has been theoretically shown to be achievable at distances as far as 300 km through photon-lossy telecommunication optical fibers, with just one round of hybrid entanglement swapping midway through the transmission.[98] Furthermore, it has been reported that employing the hybrid entanglement in quantum secure communication enables higher communication efficiency and fidelity.[99]

There are at least two reasons why entanglement swapping and quantum repeaters using hybrid states may offer significant advantages. First, as previously discussed, hybrid-state methods can perform highly efficient BSMs. Entanglement swapping relies on BSMs, and the hybrid-state-based approach allows for efficient BSMs by utilizing the coherent-state part. Second, by adjusting the amplitude of the coherent-state component in hybrid states, one can construct a loss-tolerant architecture suitable for long-distance transmission, as shown in Figure 5B. This advantage has already been experimentally demonstrated through tele-amplification,[100] wherein a state with a small coherent amplitude is transmitted over a long distance, but the amplitude is amplified after transmission. Furthermore, the qubit-converting technology between coherent-state qubits and single-photon qubits has not only been theoretically explored using the teleportation protocol[92,94] but has also been experimentally demonstrated[39,40,42] (see Figures 5C and 5D). It allows one to convert a cat-state qubit to a single-photon qubit, and vice versa. These techniques will be powerful tools for constructing hybrid networks, especially since the operations that can be efficiently performed by the coherent-state and single-photon parts may differ.

REMARKS AND OUTLOOK

The photonic hybrid quantum computing utilizing cat-state qubits and single-photon qubits[33–36] combines the advantages of both modalities while significantly overcoming the limitations of conventional methods and offers substantial benefits for the realization of FTQC. Specifically, this hybrid scheme enables

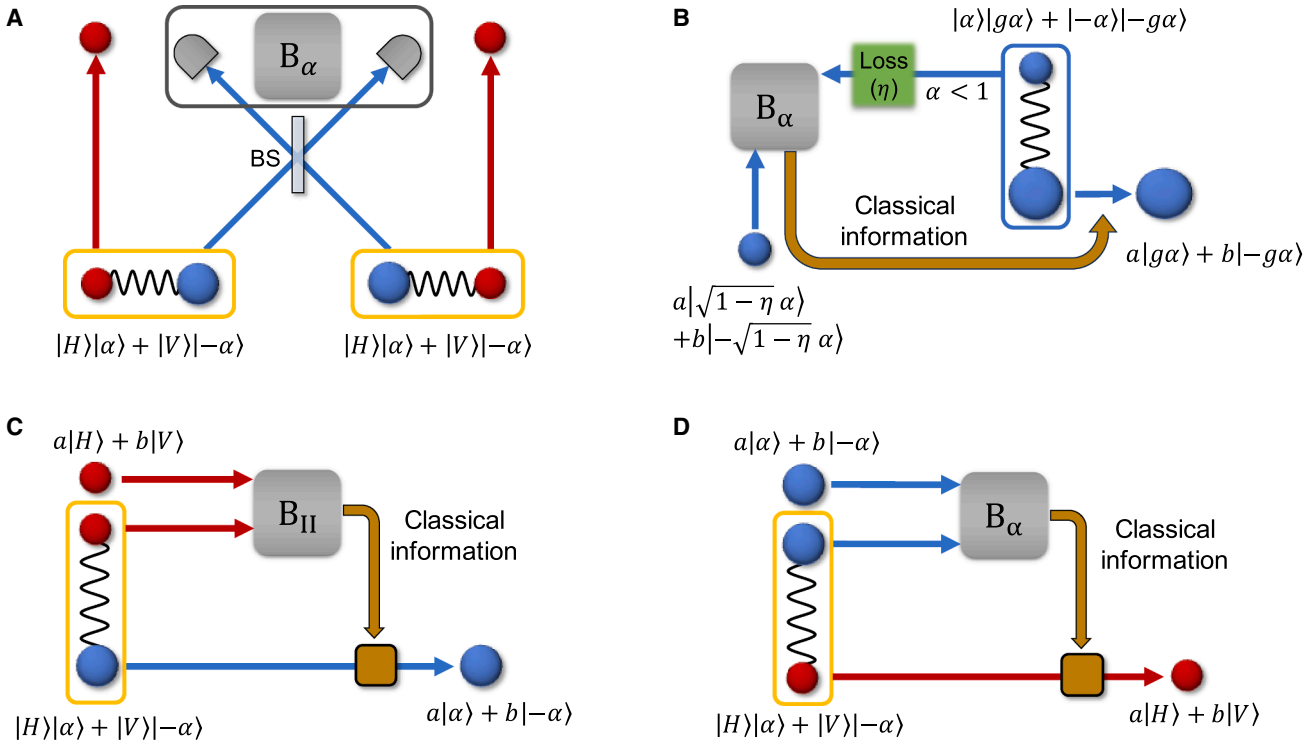

Figure 5. Schemes for hybrid quantum networks

(A) Loss-resilient entanglement swapping using hybrid pairs and B_α.[87] Here, B_α can be displaced with other measurement strategies, such as homodyne detection, for better performance, depending on the loss environment.[87]

(B) Tele-amplification of a cat-state qubit for loss-resilient communication.[100]

(C and D) Teleporation (C) from a single-photon qubit to a cat-state qubit[40,42] and (D) from a cat-state to a single-photon qubit.[39]

nearly deterministic universal gate operations, thereby greatly enhancing resource efficiency. At the same time, it allows for ballistic MBQC without active feedforward, thereby overcoming the limitations of single-photon-qubit-based approaches. Recent proposals based on single-photon qubits, such as MBQC[10,11] and FBQC,[12,13] while capable of achieving high error thresholds, require either active feedforward[10,11,13] or excessive resources.[12–14] Thus, achieving both high resource efficiency and active-feedforward-free operations is a significant practical advantage of the hybrid approach. Maintaining this combination of high resource efficiency and the ballistic nature, while still offering a reasonable loss threshold around 1% per mode (i.e., ≈2% per hybrid qubit), makes the hybrid approach a promising candidate for implementing photonic quantum computing.

Another strong contender in photonic quantum computing is the GKP-state-based approach,[22] which offers advantages in error correction efficiency. However, it faces a major challenge of generating the photonic GKP states themselves. In contrast, the hybrid approach benefits from the fact that its fundamental resource—namely, the hybrid qubit—has known implementation methods and has already been demonstrated experimentally.[37,38,40]

We have compared several hybrid schemes proposed to date. Taking into account the values of η_{th}, N, and α_{opt} in Table 1, PHTQC-2[35] might be the most advantageous among the suggested schemes. HCQC[36] could work in a more resource-efficient way if improved techniques to generate large-amplitude ($\alpha \approx 2.9$) hybrid pairs are developed. Further advancements may be possible through integration with techniques such as low-density parity-check codes,[101] FBQC,[12] and autonomous error correction,[62] as well as through the use of single-rail logic[102] for the DV mode, as its merit for teleportation was shown.[93]

Beyond photonics, hybrid architectures in circuit-QED and trapped-ion platforms harness the enhanced nonlinearity of bosonic modes to efficiently implement bosonic gates,[103] prepare non-classical states,[103,104] and scale up the number of qubits.[105] Indeed, cross-system interactions in hybrid systems enable autonomous error correction, demonstrated by long-lived GKP and cat codes stabilized via dispersive or two-photon-dissipation processes.[106,107] It is an open challenge to engineer such mechanisms for photonic hybrid qubits.

Scalable and fault-tolerant quantum computing requires extreme control of quantum states. Different physical degrees of freedom have different advantages and challenges. In order to achieve the required control of quantum states, a hybrid approach is a natural direction to pursue. In this regard, manipulating the interfaces in hybrid systems will be an important issue.

ACKNOWLEDGMENTS

We are grateful to Seung-Woo Lee for valuable discussions and suggestions. J.L. is supported by the Korea Institute of Science and Technology (2E33546

and 2E33541) and the National Research Foundation (NRF) of Korea (2022M3K4A1094774 and RS-2024-00509800). S.O., Y.S.T., M.S.K., and H.J. are supported by an NRF of Korea grant funded by the Korean government (MSIT) (no. RS-2024-00413957). Y.S.T. is supported by the NRF of Korea (RS-2023-00237959, RS-2024-00437191, RS-2024-00438415, and RS-2025-02219034). S.-H.L. is supported by the Australian Research Council via the Centre of Excellence in Engineered Quantum Systems (EQUS) Project no. CE170100009. H.K. is supported by the Korea Institute for Advanced Study (KIAS) Individual Grant no. CG085302. M.S.K. acknowledges funding from the UK EPSRC through EP/Z53318X/1, EP/W032643/1, and EP/Y004752/1 and from the KIST through the Open Innovation Fund. H.J. is supported by an NRF of Korea grant funded by the Korean government (MSIT) (nos. RS-2024-00438415 and RS-2023-NR076733) and by Institute of Information & Communications Technology Planning & Evaluation (IITP) grants funded by the Korean government (MSIT) (IITP-2025-RS-2020-II201606 and IITP-2025-RS-2024-00437191).

DECLARATION OF INTERESTS

The authors declare no competing interests.

REFERENCES

1. Kim, Y., Eddins, A., Anand, S., Wei, K.X., van den Berg, E., Rosenblatt, S., Nayfeh, H., Wu, Y., Zaletel, M., Temme, K., and Kandala, A. (2023). Evidence for the utility of quantum computing before fault tolerance. Nature *618*, 500–505. https://doi.org/10.1038/s41586-023-06096-3.
2. Monroe, C., Campbell, W.C., Duan, L.M., Gong, Z.X., Gorshkov, A.V., Hess, P.W., Islam, R., Kim, K., Linke, N.M., Pagano, G., et al. (2021). Programmable quantum simulations of spin systems with trapped ions. Rev. Mod. Phys. *93*, 025001. https://doi.org/10.1103/RevModPhys.93.025001.
3. Bluvstein, D., Evered, S.J., Geim, A.A., Li, S.H., Zhou, H., Manovitz, T., Ebadi, S., Cain, M., Kalinowski, M., Hangleiter, D., et al. (2024). Logical quantum processor based on reconfigurable atom arrays. Nature *626*, 58–65. https://doi.org/10.1038/s41586-023-06927-3.
4. Knill, E., Laflamme, R., and Milburn, G.J. (2001). A scheme for efficient quantum computation with linear optics. Nature *409*, 46–52. https://doi.org/10.1038/35051009.
5. Kok, P., Munro, W.J., Nemoto, K., Ralph, T.C., Dowling, J.P., and Milburn, G.J. (2007). Linear optical quantum computing with photonic qubits. Rev. Mod. Phys. *79*, 135–174. https://doi.org/10.1103/RevModPhys.79.135.
6. Lütkenhaus, N., Calsamiglia, J., and Suominen, K.A. (1999). Bell measurements for teleportation. Phys. Rev. *59*, 3295–3300. https://doi.org/10.1103/PhysRevA.59.3295.
7. Calsamiglia, J., and Lütkenhaus, N. (2001). Maximum efficiency of a linear-optical bell-state analyzer. Appl. Phys. B *72*, 67–71. https://doi.org/10.1007/s003400000484.
8. Gottesman, D., and Chuang, I.L. (1999). Demonstrating the viability of universal quantum computation using teleportation and single-qubit operations. Nature *402*, 390–393. https://doi.org/10.1038/46503.
9. Raussendorf, R., and Briegel, H.J. (2001). A one-way quantum computer. Phys. Rev. Lett. *86*, 5188–5191. https://doi.org/10.1103/PhysRevLett.86.5188.
10. Omkar, S., Lee, S.H., Teo, Y.S., Lee, S.W., and Jeong, H. (2022). All-photonic architecture for scalable quantum computing with greenberger-horne-zeilinger states. PRX Quantum *3*, 030309. https://doi.org/10.1103/PRXQuantum.3.030309.
11. Lee, S.H., Omkar, S., Teo, Y.S., and Jeong, H. (2023). Parity-encoding-based quantum computing with bayesian error tracking. npj Quantum Inf. *9*, 39. https://doi.org/10.1038/s41534-023-00705-9.
12. Bartolucci, S., Birchall, P., Bombín, H., Cable, H., Dawson, C., Gimeno-Segovia, M., Johnston, E., Kieling, K., Nickerson, N., Pant, M., et al. (2023). Fusion-based quantum computation. Nat. Commun. *14*, 912. https://doi.org/10.1038/s41467-023-36493-1.
13. Song, W., Kang, N., Kim, Y.S., and Lee, S.W. (2024). Encoded-fusion-based quantum computation for high thresholds with linear optics. Phys. Rev. Lett. *133*, 050605. https://doi.org/10.1103/PhysRevLett.133.050605.
14. Bartolucci, S., Bell, T., Bombin, H., Birchall, P., Bulmer, J., Dawson, C., Farrelly, T., Gartenstein, S., Gimeno-Segovia, M., Litinski, D., et al. (2025). Comparison of schemes for highly loss tolerant photonic fusion based quantum computing. Preprint at arXiv. https://arxiv.org/abs/2506.11975.
15. Lloyd, S., and Braunstein, S.L. (1999). Quantum computation over continuous variables. Phys. Rev. Lett. *82*, 1784–1787. https://doi.org/10.1103/PhysRevLett.82.1784.
16. Braunstein, S.L., and van Loock, P. (2005). Quantum information with continuous variables. Rev. Mod. Phys. *77*, 513–577. https://doi.org/10.1103/RevModPhys.77.513.
17. Menicucci, N.C., van Loock, P., Gu, M., Weedbrook, C., Ralph, T.C., and Nielsen, M.A. (2006). Universal quantum computation with continuous-variable cluster states. Phys. Rev. Lett. *97*, 110501. https://doi.org/10.1103/PhysRevLett.97.110501.
18. Gu, M., Weedbrook, C., Menicucci, N.C., Ralph, T.C., and van Loock, P. (2009). Quantum computing with continuous-variable clusters. Phys. Rev. A *79*, 062318. https://doi.org/10.1103/PhysRevA.79.062318.
19. Marek, P., Filip, R., and Furusawa, A. (2011). Deterministic implementation of weak quantum cubic nonlinearity. Phys. Rev. A *84*, 053802. https://doi.org/10.1103/PhysRevA.84.053802.
20. Blair, S., Arzani, F., Ferrini, G., and Ferraro, A. (2025). Towards fault-tolerant quantum computation with universal continuous-variable gates. Preprint at arXiv. https://arxiv.org/abs/2506.13643.
21. Albert, V.V., Noh, K., Duivenvoorden, K., Young, D.J., Brierley, R.T., Reinhold, P., Vuillot, C., Li, L., Shen, C., Girvin, S.M., et al. (2018). Performance and structure of single-mode bosonic codes. Phys. Rev. A *97*, 032346. https://doi.org/10.1103/PhysRevA.97.032346.
22. Gottesman, D., Kitaev, A., and Preskill, J. (2001). Encoding a qubit in an oscillator. Phys. Rev. *64*, 012310. https://doi.org/10.1103/physreva.64.012310.
23. Michael, M.H., Silveri, M., Brierley, R.T., Albert, V.V., Salmilehto, J., Jiang, L., and Girvin, S.M. (2016). New class of quantum error-correcting codes for a bosonic mode. Phys. Rev. X *6*, 031006. https://doi.org/10.1103/PhysRevX.6.031006.
24. Cochrane, P.T., Milburn, G.J., and Munro, W.J. (1999). Macroscopically distinct quantum-superposition states as a bosonic code for amplitude damping. Phys. Rev. *59*, 2631–2634. https://doi.org/10.1103/PhysRevA.59.2631.
25. Jeong, H., and Kim, M.S. (2002). Efficient quantum computation using coherent states. Phys. Rev. *65*, 042305. https://doi.org/10.1103/PhysRevA.65.042305.
26. Ralph, T.C., Gilchrist, A., Milburn, G.J., Munro, W.J., and Glancy, S. (2003). Quantum computation with optical coherent states. Phys. Rev. *68*, 042319. https://doi.org/10.1103/PhysRevA.68.042319.
27. Jeong, H., Kim, M.S., and Lee, J. (2001). Quantum-information processing for a coherent superposition state via a mixedentangled coherent channel. Phys. Rev. *64*, 052308. https://doi.org/10.1103/physreva.64.052308.
28. Jeong, H., and Kim, M.S. (2002). Purification of entangled coherent states. Quant. Inf. Comput. *2*, 208–221. https://arxiv.org/abs/quant-ph/0111015.
29. Ralph, T.C., and Pryde, G.J. (2010). Chapter 4 - optical quantum computation. Prog. Opt *54*, 209–269. https://doi.org/10.1016/S0079-6638(10)05409-0.

Please cite this article in press as: Lee et al., Photonic hybrid quantum computing, Newton (2025), https://doi.org/10.1016/j.newton.2025.100359

30. Ourjoumtsev, A., Tualle-Brouri, R., Laurat, J., and Grangier, P. (2006). Generating optical schrödinger kittens for quantum information processing. Science *312*, 83–86. https://doi.org/10.1126/science.1122858.

31. Ourjoumtsev, A., Jeong, H., Tualle-Brouri, R., and Grangier, P. (2007). Generation of optical 'schrödinger cats' from photon number states. Nature *448*, 784–786. https://doi.org/10.1038/nature06054.

32. Andersen, U.L., Neergaard-Nielsen, J.S., van Loock, P., and Furusawa, A. (2015). Hybrid discrete- and continuous-variable quantum information. Nat. Phys. *11*, 713–719. https://doi.org/10.1038/nphys3410.

33. Lee, S.W., and Jeong, H. (2013). Near-deterministic quantum teleportation and resource-efficient quantum computation using linear optics and hybrid qubits. Phys. Rev. *87*, 022326. https://doi.org/10.1103/PhysRevA.87.022326.

34. Omkar, S., Teo, Y.S., and Jeong, H. (2020). Resource-efficient topological fault-tolerant quantum computation with hybrid entanglement of light. Phys. Rev. Lett. *125*, 060501. https://doi.org/10.1103/PhysRevLett.125.060501.

35. Omkar, S., Teo, Y.S., Lee, S.W., and Jeong, H. (2021). Highly photon-loss-tolerant quantum computing using hybrid qubits. Phys. Rev. *103*, 032602. https://doi.org/10.1103/PhysRevA.103.032602.

36. Lee, J., Kang, N., Lee, S.H., Jeong, H., Jiang, L., and Lee, S.W. (2024). Fault-tolerant quantum computation by hybrid qubits with bosonic cat code and single photons. PRX Quantum *5*, 030322. https://doi.org/10.1103/PRXQuantum.5.030322.

37. Jeong, H., Zavatta, A., Kang, M., Lee, S.W., Costanzo, L.S., Grandi, S., Ralph, T.C., and Bellini, M. (2014). Generation of hybrid entanglement of light. Nat. Photonics *8*, 564–569. https://doi.org/10.1038/nphoton.2014.136.

38. Morin, O., Huang, K., Liu, J., Le Jeannic, H., Fabre, C., and Laurat, J. (2014). Remote creation of hybrid entanglement between particle-like and wave-like optical qubits. Nat. Photonics *8*, 570–574. https://doi.org/10.1038/nphoton.2014.137.

39. Ulanov, A.E., Sychev, D., Pushkina, A.A., Fedorov, I.A., and Lvovsky, A.I. (2017). Quantum teleportation between discrete and continuous encodings of an optical qubit. Phys. Rev. Lett. *118*, 160501. https://doi.org/10.1103/PhysRevLett.118.160501.

40. Sychev, D.V., Ulanov, A.E., Tiunov, E.S., Pushkina, A.A., Kuzhamuratov, A., Novikov, V., and Lvovsky, A.I. (2018). Entanglement and teleportation between polarization and wave-like encodings of an optical qubit. Nat. Commun. *9*, 3672. https://doi.org/10.1038/s41467-018-06055-x.

41. Guccione, G., Darras, T., Le Jeannic, H., Verma, V.B., Nam, S.W., Cavaillès, A., and Laurat, J. (2020). Connecting heterogeneous quantum networks by hybrid entanglement swapping. Sci. Adv. *6*, eaba4508. https://doi.org/10.1126/sciadv.aba4508.

42. Darras, T., Asenbeck, B.E., Guccione, G., Cavaillès, A., Le Jeannic, H., and Laurat, J. (2023). A quantum-bit encoding converter. Nat. Photonics *17*, 165–170. https://doi.org/10.1038/s41566-022-01117-5.

43. Browne, D.E., and Rudolph, T. (2005). Resource-efficient linear optical quantum computation. Phys. Rev. Lett. *95*, 010501. https://doi.org/10.1103/PhysRevLett.95.010501.

44. Zaidi, H.A., and van Loock, P. (2013). Beating the one-half limit of ancilla-free linear optics bell measurements. Phys. Rev. Lett. *110*, 260501. https://doi.org/10.1103/PhysRevLett.110.260501.

45. Grice, W.P. (2011). Arbitrarily complete bell-state measurement using only linear optical elements. Phys. Rev. *84*, 042331. https://doi.org/10.1103/PhysRevA.84.042331.

46. Ewert, F., and van Loock, P. (2014). 34-efficient bell measurement with passive linear optics and unentangled ancillae. Phys. Rev. Lett. *113*, 140403. https://doi.org/10.1103/PhysRevLett.113.140403.

47. Lee, S.W., Park, K., Ralph, T.C., and Jeong, H. (2015). Nearly deterministic bell measurement for multiphoton qubits and its application to quantum information processing. Phys. Rev. Lett. *114*, 113603. https://doi.org/10.1103/PhysRevLett.114.113603.

48. Dawson, C.M., Haselgrove, H.L., and Nielsen, M.A. (2006). Noise thresholds for optical cluster-state quantum computation. Phys. Rev. *73*, 052306. https://doi.org/10.1103/PhysRevA.73.052306.

49. Raussendorf, R., Harrington, J., and Goyal, K. (2006). A fault-tolerant one-way quantum computer. Ann. Phys. *321*, 2242–2270. https://doi.org/10.1016/j.aop.2006.01.012.

50. Herrera-Martí, D.A., Fowler, A.G., Jennings, D., and Rudolph, T. (2010). Photonic implementation for the topological cluster-state quantum computer. Phys. Rev. *82*, 032332. https://doi.org/10.1103/physreva.82.032332.

51. Gimeno-Segovia, M., Shadbolt, P., Browne, D.E., and Rudolph, T. (2015). From three-photon greenberger-horne-zeilinger states to ballistic universal quantum computation. Phys. Rev. Lett. *115*, 020502. https://doi.org/10.1103/PhysRevLett.115.020502.

52. Herr, D., Paler, A., Devitt, S.J., Nori, F., Herr, D., Paler, A., Devitt, S.J., and Nori, F. (2018). A local and scalable lattice renormalization method for ballistic quantum computation. npj Quantum Inf. *4*, 27. https://doi.org/10.1038/s41534-018-0076-0.

53. Hayes, A.J.F., Haselgrove, H.L., Gilchrist, A., and Ralph, T.C. (2010). Fault tolerance in parity-state linear optical quantum computing. Phys. Rev. *82*, 022323. https://doi.org/10.1103/PhysRevA.82.022323.

54. Pankovich, B., Kan, A., Wan, K.H., Ostmann, M., Neville, A., Omkar, S., Sohbi, A., and Brádler, K. (2024). High-photon-loss threshold quantum computing using ghz-state measurements. Phys. Rev. Lett. *133*, 050604. https://doi.org/10.1103/PhysRevLett.133.050604.

55. Yokoyama, S., Ukai, R., Armstrong, S.C., Sornphiphatphong, C., Kaji, T., Suzuki, S., Yoshikawa, J.i., Yonezawa, H., Menicucci, N.C., and Furusawa, A. (2013). Ultra-large-scale continuous-variable cluster states multiplexed in the time domain. Nat. Photonics *7*, 982–986. https://doi.org/10.1038/nphoton.2013.287.

56. Asavanant, W., Shiozawa, Y., Yokoyama, S., Charoensombutamon, B., Emura, H., Alexander, R.N., Takeda, S., Yoshikawa, J.i., Menicucci, N.C., Yonezawa, H., and Furusawa, A. (2019). Generation of time-domain-multiplexed two-dimensional cluster state. Science *366*, 373–376. https://doi.org/10.1126/science.aay2645.

57. Larsen, M.V., Guo, X., Breum, C.R., Neergaard-Nielsen, J.S., and Andersen, U.L. (2019). Deterministic generation of a two-dimensional cluster state. Science *366*, 369–372. https://doi.org/10.1126/science.aay4354.

58. Larsen, M.V., Guo, X., Breum, C.R., Neergaard-Nielsen, J.S., and Andersen, U.L. (2021). Deterministic multi-mode gates on a scalable photonic quantum computing platform. Nat. Phys. *17*, 1018–1023. https://doi.org/10.1038/s41567-021-01296-y.

59. Bartlett, S.D., Sanders, B.C., Braunstein, S.L., and Nemoto, K. (2002). Efficient classical simulation of continuous variable quantum information processes. Phys. Rev. Lett. *88*, 097904. https://doi.org/10.1103/PhysRevLett.88.097904.

60. Asavanant, W., Fukui, K., Sakaguchi, A., and Furusawa, A. (2023). Switching-free time-domain optical quantum computation with quantum teleportation. Phys. Rev. A *107*, 032412. https://doi.org/10.1103/PhysRevA.107.032412.

61. Lund, A.P., Ralph, T.C., and Haselgrove, H.L. (2008). Fault-tolerant linear optical quantum computing with small-amplitude coherent states. Phys. Rev. Lett. *100*, 030503. https://doi.org/10.1103/PhysRevLett.100.030503.

62. Leghtas, Z., Kirchmair, G., Vlastakis, B., Schoelkopf, R.J., Devoret, M.H., and Mirrahimi, M. (2013). Hardware-efficient autonomous quantum memory protection. Phys. Rev. Lett. *111*, 120501. https://doi.org/10.1103/PhysRevLett.111.120501.

63. Mirrahimi, M., Leghtas, Z., Albert, V.V., Touzard, S., Schoelkopf, R.J., Jiang, L., and Devoret, M.H. (2014). Dynamically protected cat-qubits: a new paradigm for universal quantum computation. New J. Phys. *16*, 045014. https://doi.org/10.1088/1367-2630/16/4/045014.

64. Neergaard-Nielsen, J.S., Nielsen, B.M., Hettich, C., Mølmer, K., and Polzik, E.S. (2006). Generation of a superposition of odd photon number states for quantum information networks. Phys. Rev. Lett. *97*, 083604. https://doi.org/10.1103/PhysRevLett.97.083604.

65. Takahashi, H., Wakui, K., Suzuki, S., Takeoka, M., Hayasaka, K., Furusawa, A., and Sasaki, M. (2008). Generation of large-amplitude coherent-state superposition via ancilla-assisted photon subtraction. Phys. Rev. Lett. *101*, 233605. https://doi.org/10.1103/PhysRevLett.101.233605.

66. Lund, A.P., Jeong, H., Ralph, T.C., and Kim, M.S. (2004). Conditional production of superpositions of coherent states with inefficient photon detection. Phys. Rev. *70*, 020101. https://doi.org/10.1103/PhysRevA.70.020101.

67. Etesse, J., Bouillard, M., Kanseri, B., and Tualle-Brouri, R. (2015). Experimental generation of squeezed cat states with an operation allowing iterative growth. Phys. Rev. Lett. *114*, 193602. https://doi.org/10.1103/PhysRevLett.114.193602.

68. Sychev, D.V., Ulanov, A.E., Pushkina, A.A., Richards, M.W., Fedorov, I.A., and Lvovsky, A.I. (2017). Enlargement of optical schrödinger's cat states. Nat. Photonics *11*, 379–382. https://doi.org/10.1038/nphoton.2017.57.

69. Bergmann, M., and Van Loock, P. (2016). Quantum error correction against photon loss using multicomponent cat states. Phys. Rev. *94*, 042332. https://doi.org/10.1103/physreva.94.042332.

70. Grimsmo, A.L., Combes, J., and Baragiola, B.Q. (2020). Quantum computing with rotation-symmetric bosonic codes. Phys. Rev. X *10*, 011058. https://doi.org/10.1103/PhysRevX.10.011058.

71. Hastrup, J., and Andersen, U.L. (2022). All-optical cat-code quantum error correction. Phys. Rev. Res. *4*, 043065. https://doi.org/10.1103/PhysRevResearch.4.043065.

72. Su, D., Dhand, I., and Ralph, T.C. (2022). Universal quantum computation with optical four-component cat qubits. Phys. Rev. *106*, 042614. https://doi.org/10.1103/PhysRevA.106.042614.

73. Hastrup, J., Neergaard-Nielsen, J.S., and Andersen, U.L. (2020). Deterministic generation of a four-component optical cat state. Opt. Lett. *45*, 640–643. https://doi.org/10.1364/OL.383194.

74. Fukui, K., Tomita, A., Okamoto, A., and Fujii, K. (2018). High-threshold fault-tolerant quantum computation with analog quantum error correction. Phys. Rev. X *8*, 021054. https://doi.org/10.1103/PhysRevX.8.021054.

75. Bourassa, J.E., Alexander, R.N., Vasmer, M., Patil, A., Tzitrin, I., Matsuura, T., Su, D., Baragiola, B.Q., Guha, S., Dauphinais, G., et al. (2021). Blueprint for a scalable photonic fault-tolerant quantum computer. Quantum *5*, 392. https://doi.org/10.22331/q-2021-02-04-392.

76. Tzitrin, I., Matsuura, T., Alexander, R.N., Dauphinais, G., Bourassa, J.E., Sabapathy, K.K., Menicucci, N.C., and Dhand, I. (2021). Fault-tolerant quantum computation with static linear optics. PRX Quantum *2*, 040353. https://doi.org/10.1103/prxquantum.2.040353.

77. Aghaee Rad, H., Ainsworth, T., Alexander, R.N., Altieri, B., Askarani, M.F., Baby, R., Banchi, L., Baragiola, B.Q., Bourassa, J.E., Chadwick, R.S., et al. (2025). Scaling and networking a modular photonic quantum computer. Nature *638*, 912–919. https://doi.org/10.1038/s41586-024-08406-9.

78. Vasconcelos, H.M., Sanz, L., and Glancy, S. (2010). All-optical generation of states for "encoding a qubit in an oscillator". Opt. Lett. *35*, 3261–3263. https://doi.org/10.1364/OL.35.003261.

79. Weigand, D.J., and Terhal, B.M. (2018). Generating grid states from schrödinger-cat states without postselection. Phys. Rev. *97*, 022341. https://doi.org/10.1103/PhysRevA.97.022341.

80. Tzitrin, I., Bourassa, J.E., Menicucci, N.C., and Sabapathy, K.K. (2020). Progress towards practical qubit computation using approximate gottesman-kitaev-preskill codes. Phys. Rev. *101*, 032315. https://doi.org/10.1103/PhysRevA.101.032315.

81. Fukui, K., Takeda, S., Endo, M., Asavanant, W., Yoshikawa, J.i., van Loock, P., and Furusawa, A. (2022). Efficient backcasting search for optical quantum state synthesis. Phys. Rev. Lett. *128*, 240503. https://doi.org/10.1103/PhysRevLett.128.240503.

82. Takase, K., Fukui, K., Kawasaki, A., Asavanant, W., Endo, M., Yoshikawa, J.i., van Loock, P., and Furusawa, A. (2023). Gottesman-kitaev-preskill qubit synthesizer for propagating light. npj Quantum Inf. *9*, 98. https://doi.org/10.1038/s41534-023-00772-y.

83. Konno, S., Asavanant, W., Hanamura, F., Nagayoshi, H., Fukui, K., Sakaguchi, A., Ide, R., China, F., Yabuno, M., Miki, S., et al. (2024). Logical states for fault-tolerant quantum computation with propagating light. Science *383*, 289–293. https://doi.org/10.1126/science.adk7560.

84. Larsen, M.V., Bourassa, J.E., Kocsis, S., Tasker, J.F., Chadwick, R.S., González-Arciniegas, C., Hastrup, J., Lopetegui-González, C.E., Miatto, F.M., Motamedi, A., et al. (2025). Integrated photonic source of gottesman–kitaev–preskill qubits. Nature *642*, 587–591. https://doi.org/10.1038/s41586-025-09044-5.

85. Auger, J.M., Anwar, H., Gimeno-Segovia, M., Stace, T.M., and Browne, D.E. (2018). Fault-tolerant quantum computation with nondeterministic entangling gates. Phys. Rev. A *97*, 030301. https://doi.org/10.1103/PhysRevA.97.030301.

86. Kwon, H., and Jeong, H. (2015). Generation of hybrid entanglement between a single-photon polarization qubit and a coherent state. Phys. Rev. *91*, 012340. https://doi.org/10.1103/PhysRevA.91.012340.

87. Lim, Y., Joo, J., Spiller, T.P., and Jeong, H. (2016). Loss-resilient photonic entanglement swapping using optical hybrid states. Phys. Rev. *94*, 062337. https://doi.org/10.1103/PhysRevA.94.062337.

88. van Loock, P., Ladd, T.D., Sanaka, K., Yamaguchi, F., Nemoto, K., Munro, W.J., and Yamamoto, Y. (2006). Hybrid quantum repeater using bright coherent light. Phys. Rev. Lett. *96*, 240501. https://doi.org/10.1103/PhysRevLett.96.240501.

89. Brask, J.B., Rigas, I., Polzik, E.S., Andersen, U.L., and Sørensen, A.S. (2010). Hybrid long-distance entanglement distribution protocol. Phys. Rev. Lett. *105*, 160501. https://doi.org/10.1103/PhysRevLett.105.160501.

90. Sheng, Y.B., Zhou, L., and Long, G.L. (2013). Hybrid entanglement purification for quantum repeaters. Phys. Rev. *88*, 022302. https://doi.org/10.1103/PhysRevA.88.022302.

91. Park, K., Lee, S.W., and Jeong, H. (2012). Quantum teleportation between particlelike and fieldlike qubits using hybrid entanglement under decoherence effects. Phys. Rev. *86*, 062301. https://doi.org/10.1103/PhysRevA.86.062301.

92. Jeong, H., Bae, S., and Choi, S. (2016). Quantum teleportation between a single-rail single-photon qubit and a coherent-state qubit using hybrid entanglement under decoherence effects. Quantum Inf. Process. *15*, 913–927. https://doi.org/10.1007/s11128-015-1191-x.

93. Kim, H., Lee, S.W., and Jeong, H. (2016). Two different types of optical hybrid qubits for teleportation in a lossy environment. Quantum Inf. Process. *15*, 4729–4746. https://doi.org/10.1007/s11128-016-1408-7.

94. Choi, S., Lee, S.H., and Jeong, H. (2020). Teleportation of a multiphoton qubit using hybrid entanglement with a loss-tolerant carrier qubit. Phys. Rev. *102*, 012424. https://doi.org/10.1103/PhysRevA.102.012424.

95. Bose, S., and Jeong, H. (2022). Quantum teleportation of hybrid qubits and single-photon qubits using gaussian resources. Phys. Rev. *105*, 032434. https://doi.org/10.1103/PhysRevA.105.032434.

96. Bera, S., Bose, S., Jeong, H., and Majumdar, A.S. (2025). Sharing quantum nonlocality and teleportation over long distances using optical hybrid states. J. Opt. Soc. Am. B *42*, 2505–2513. https://doi.org/10.1364/JOSAB.573536.

97. Takeda, S., Mizuta, T., Fuwa, M., van Loock, P., and Furusawa, A. (2013). Deterministic quantum teleportation of photonic quantum bits by a hybrid technique. Nature *500*, 315–318. https://doi.org/10.1038/nature12366.

Please cite this article in press as: Lee et al., Photonic hybrid quantum computing, Newton (2025), https://doi.org/10.1016/j.newton.2025.100359

98. Bose, S., Singh, J., Cabello, A., and Jeong, H. (2024). Long-distance entanglement sharing using hybrid states of discrete and continuous variables. Phys. Rev. Appl. *21*, 064013. https://doi.org/10.1103/PhysRevApplied.21.064013.

99. Zhao, P., Zhong, W., Du, M.M., Li, X.Y., Zhou, L., and Sheng, Y.B. (2024). Quantum secure direct communication with hybrid entanglement. Front. Phys. *19*, 51201. https://doi.org/10.1007/s11467-024-1396-5.

100. Neergaard-Nielsen, J.S., Eto, Y., Lee, C.W., Jeong, H., and Sasaki, M. (2013). Quantum tele-amplification with a continuous-variable superposition state. Nat. Photonics *7*, 439–443. https://doi.org/10.1038/nphoton.2013.101.

101. MacKay, D.J.C., Mitchison, G., and McFadden, P.L. (2004). Sparse-graph codes for quantum error correction. IEEE Trans. Inf. Theory *50*, 2315–2330. https://doi.org/10.1109/TIT.2004.834737.

102. Lund, A.P., and Ralph, T.C. (2002). Nondeterministic gates for photonic single-rail quantum logic. Phys. Rev. *66*, 032307. https://doi.org/10.1103/PhysRevA.66.032307.

103. Kudra, M., Kervinen, M., Strandberg, I., Ahmed, S., Scigliuzzo, M., Osman, A., Lozano, D.P., Tholén, M.O., Borgani, R., Haviland, D.B., et al. (2022). Robust preparation of wigner-negative states with optimized snap-displacement sequences. PRX Quantum *3*, 030301. https://doi.org/10.1103/PRXQuantum.3.030301.

104. Eickbusch, A., Sivak, V., Ding, A.Z., Elder, S.S., Jha, S.R., Venkatraman, J., Royer, B., Girvin, S.M., Schoelkopf, R.J., and Devoret, M.H. (2022). Fast universal control of an oscillator with weak dispersive coupling to a qubit. Nat. Phys. *18*, 1464–1469. https://doi.org/10.1038/s41567-022-01776-9.

105. Kang, M., Chen, W., Kwon, H., Kim, K., and Huh, J. (2025). Doubling qubits in a trapped-ion system via vibrational dual-rail encoding. Preprint at arXiv. https://arxiv.org/abs/2505.12937.

106. Sivak, V.V., Eickbusch, A., Royer, B., Singh, S., Tsioutsios, I., Ganjam, S., Miano, A., Brock, B.L., Ding, A.Z., Frunzio, L., et al. (2023). Real-time quantum error correction beyond break-even. Nature *616*, 50–55. https://doi.org/10.1038/s41586-023-05782-6.

107. Lachance-Quirion, D., Lemonde, M.A., Simoneau, J.O., St-Jean, L., Lemieux, P., Turcotte, S., Wright, W., Lacroix, A., Fréchette-Viens, J., Shillito, R., et al. (2024). Autonomous quantum error correction of gottesman-kitaev-preskill states. Phys. Rev. Lett. *132*, 150607. https://doi.org/10.1103/PhysRevLett.132.150607.